TECHNICAL MANUAL

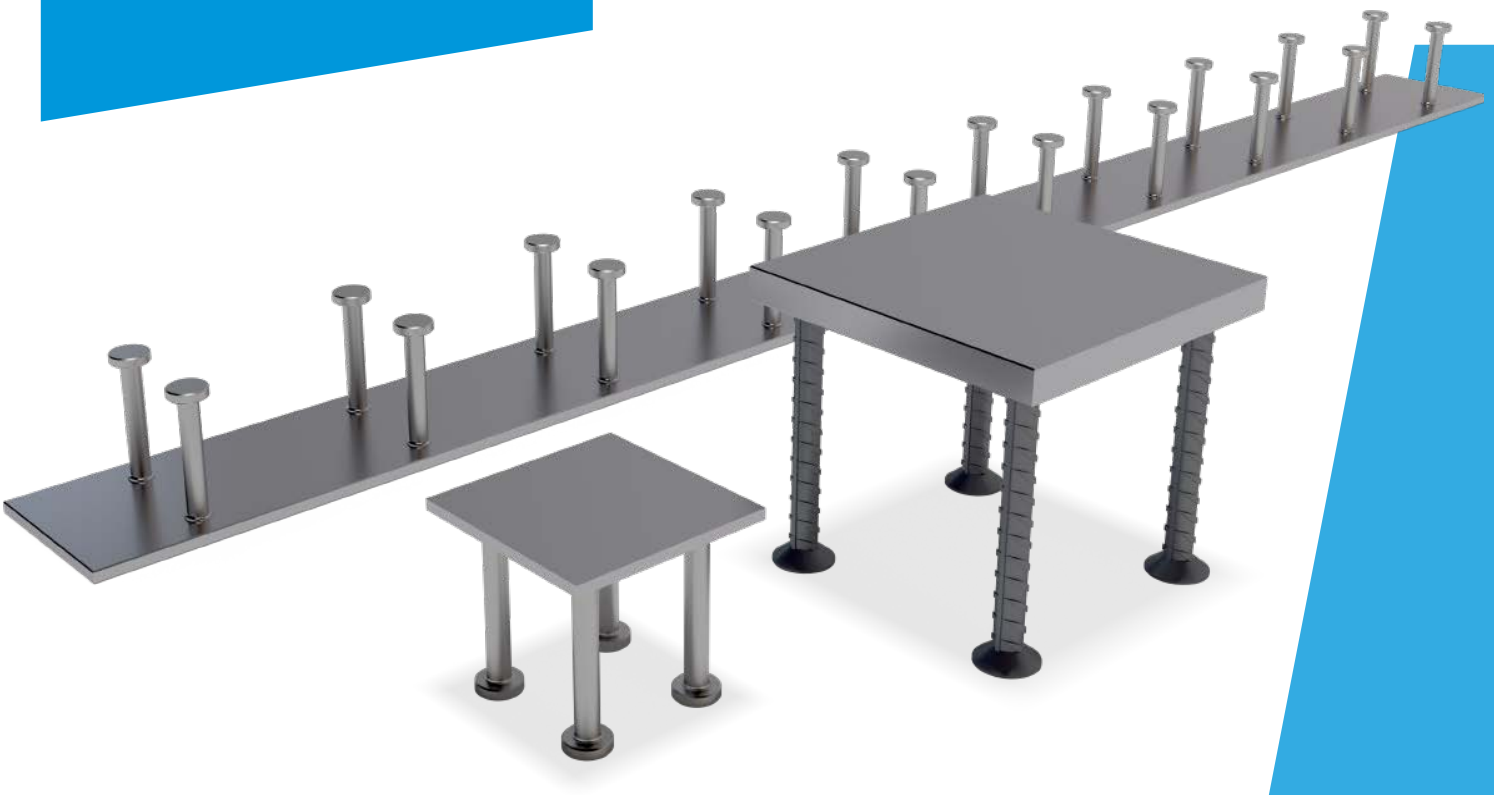

WELDA® and WELDA® Strong

Anchor Plates for Welded Connections between Steel and Concrete Structures

www.fastcon.ru

Fastcon

Fastcon

WELDA® and WELDA® Strong

Anchor Plates for Welded Connections between Steel and Concrete Structures

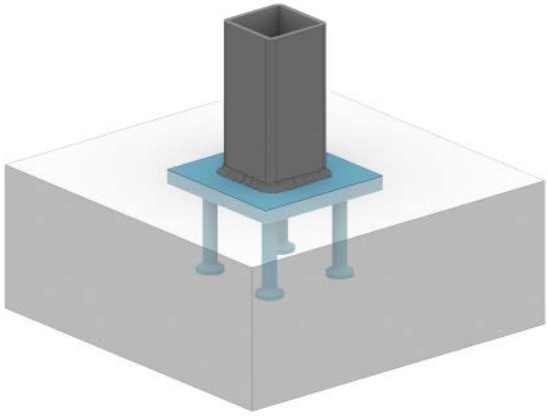

- CE mark based on European Technical Assessment ETA-16/0430 offers the easiest way to demonstrate conformity to requirements set by authorities
- Fluent, efficient and reliable to design
- Wide range of standard solutions to transfer all kind of loads:
- WELDA® Anchor Plates are for moderate and medium loads in shallow structures
- WELDA® Strong Anchor Plates are used in deeper structures to transfer heavy loads
- Can easily be modified to project specific requirements
- Multitude of material options offer an optimized solution even for the most demanding cases e.g. in industrial applications and maritime climate
- Shorter installation time e.g. in heavily reinforced constructions thanks to the light weight and easy assembly
- Possibility to avoid supplementary reinforcement thanks to increased anchorage depth

WELDA® Anchor Plates are purpose-designed building products used to create a welded connection between steel and concrete members. WELDA® Anchor Plates consist of a steel plate and headed studs embedded in concrete. The surface of the steel plate remains uncovered by concrete and thus creates a welding surface for the steel structure, allowing structural joints between steel and concrete. The headed studs anchor forces such as bending moments, normal and shear actions from other structures into the concrete members.

WELDA® and WELDA® Strong Anchor Plates cut down time needed for design work and assembly making the whole construction process faster and more efficient.

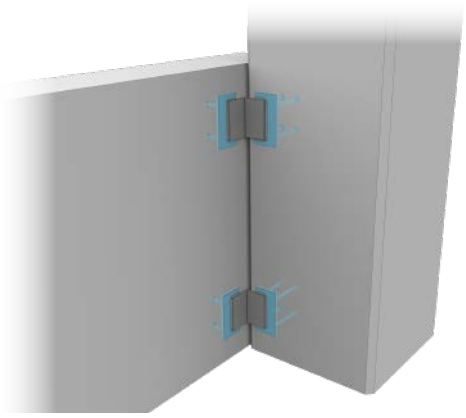

CONTENTS

1. Product properties 4

1.1 Structural behaviour 4

1.2 Limitations for application 5

1.2.1 Loading and environmental conditions 5

1.2.2 Positioning of the WELDA® Anchor Plates 6

1.3 Materials and dimensions 7

1.3.1 MODIFIED WELDA® Anchor Plates 11

1.3.2 MODIFIED WELDA® Strong Anchor Plates 12

1.3.3 Shear Anchors (SA) to WELDA® and WELDA® Strong Anchor Plates 13

1.4 Manufacturing 13

2. Resistances 14

2.1 Resistance without supplementary reinforcement 14

2.2 Resistance with supplementary reinforcement 19

2.3 Required verification for WELDA® Anchor Plates loaded in tension 20

2.4 Required verification for WELDA® Anchor Plates loaded in shear 21

2.5 Combined axial and shear load 22

Annex A – Tension and moment resistance of WELDA® Anchor Plate with supplementary reinforcement 24

Annex B – Shear resistance of WELDA® Anchor Plate with supplementary reinforcement 29

Annex C – Shear Anchors (SA) to WELDA® and WELDA® Strong Anchor Plates 34

Annex D – WELDA® Anchor Plates and types of environment and corrosion categories (informative) 35

Installation of WELDA® Anchor Plate 36

Welding to anchor plates on site 37

1. Product properties

WELDA® Anchor Plates are constructional elements that are embedded in concrete. Structural joints to the steel plate are made by welding. The plates transfer the loads from steel structures into the base concrete structure.

WELDA® Anchor Plate always includes a steel plate ① onto which headed studs ② are welded. Headed studs are also commonly known as headed anchors, headed fasteners or cast-in fasteners. WELDA® Anchor Plates are available in several sizes and materials.

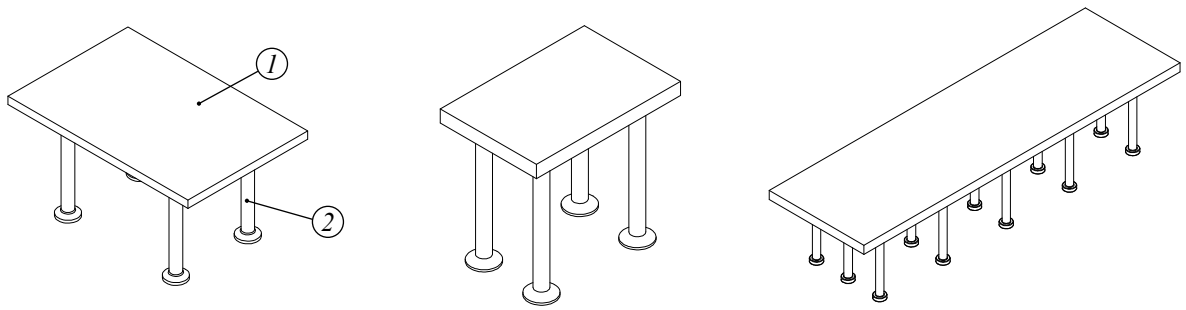

Figure 1. WELDA® Anchor Plate consists of a steel plate and welded headed studs.

1.1 Structural behaviour

WELDA® Anchor Plates are designed to transfer bending and torsional moments, as well as normal and shear forces, into concrete. The calculations assume that the steel plate is sufficiently rigid such that linear strain distribution will be valid (analogous to Bernoulli hypothesis). The steel plate transfers forces from the attached profile to the headed studs.

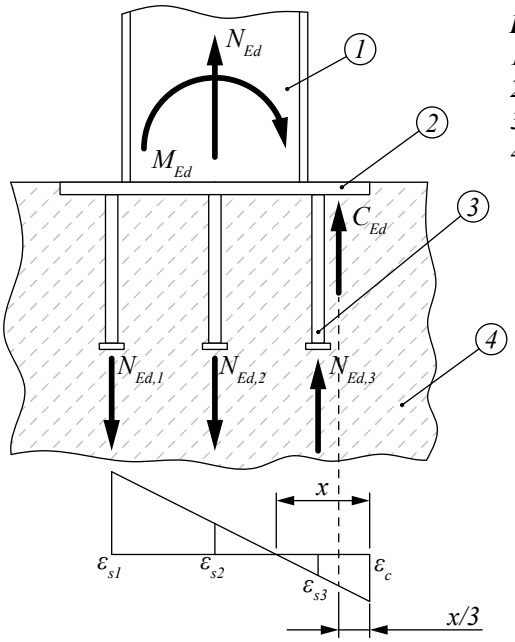

Legend:
1. Attached steel profile/member
2. Steel plate
3. Headed stud
4. Base concrete structure

Figure 2. Load distribution model under bending moment and normal force.

The forces in fastenings/anchors (N) and concrete (C) are:

$$N_{Ed,i} = A_s \cdot \varepsilon_{s,i} \cdot E_s$$

$$C_{Ed} = 0.5 \cdot b \cdot x \cdot \varepsilon_c \cdot E_c$$

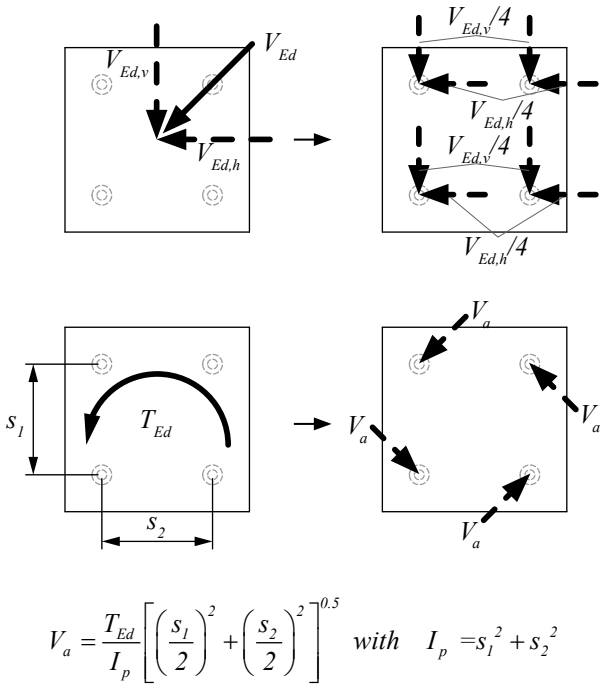

$$V_a = \frac{T_{Ed}}{I_p}\left[\left(\frac{s_1}{2}\right)^2 + \left(\frac{s_2}{2}\right)^2\right]^{0.5} \quad with \quad I_p = s_1^2 + s_2^2$$

Figure 3. Determination of shear loads on four anchors, inclined shear load V_{Ed} and torsion moment T_{Ed}.

1.2 Limitations for application

The resistances of the anchor plates have been calculated for static and quasi-static loads.

The tensile and bending resistances in *Tables 6 – 8* are calculated assuming that the tensile and bending capacity of WELDA® Anchor Plates is limited by concrete cone failure. The tensile and bending resistances of the plates can be further increased using supplementary reinforcement designed and detailed to prevent concrete cone failure in accordance with Annex A1.

The shear resistances in *Tables 6 – 8* are calculated assuming that the plate is far away from the edge. In practice, close edge distances can limit the resistances of the anchor plates and may require supplementary reinforcement that is to be designed and detailed in accordance with Annex B1.

Eccentricity (10 % from the plate side length, max 20 mm) caused by manufacturing tolerances and installation tolerance has been taken into account in the resistances. Larger eccentricities of fastening must be taken into account by design.

1.2.1 Loading and environmental conditions

WELDA® Anchor Plates are designed to be used indoors and in dry conditions. The designed lifetime for WELDA® Anchor Plates in dry internal conditions (exposure class X0) is 50 years. When using WELDA® Anchor Plates in other conditions, the surface treatment or raw materials must be adequate according to the environmental exposure class and intended operating life. WELDA® Anchor Plates are also manufactured in stainless steel materials (see section 1.3).

1.2.2 Positioning of the WELDA® Anchor Plates

The precise position of the anchor plate is indicated in the design drawings. Anchor Plates are to be fixed so that they cannot be displaced during the casting. Anchor plates can be fixed to reinforcement or on the formwork/mold by nails, glue, screws, double-sided tape, clamps, or magnets. The anchor plates can be supplied upon request with nail holes for easy fixing.

Table 1. Installation parameters for headed anchors.

WELDA® Anchor Type Nominal size d [mm]		WELDA®						WELDA® Strong		
		10	13	16	19	22	25	16	20	25
Anchorage depth	min h_{ef} [mm]	50	50	50	75	75	75	50	75	75
Minimum spacing	s_{min} [mm]	50	50	50	70	70	70	50	70	70
Minimum edge distance	c_{min} [mm]	50	50	50	70	70	70	50	70	70
Minimum thickness of concrete member	h_{min} [mm]	$h_{ef} + t_h + c_{nom}$ [1)]								

[1)] c_{nom} = required concrete cover according to national regulations.

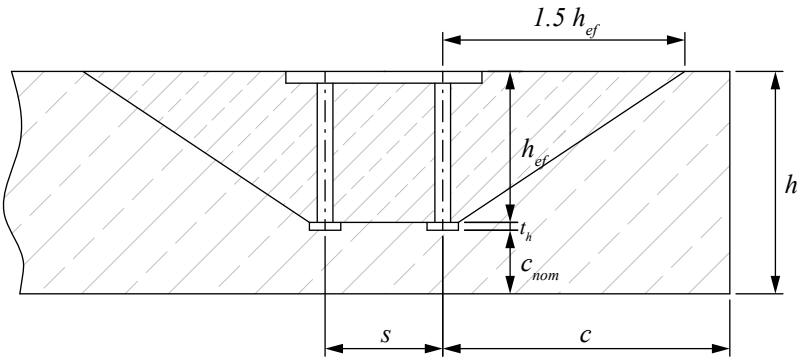

Figure 4. Parameters h_{ef}, t_h, c_{nom}, h, c, s.

1.3 Materials and dimensions

Table 2. Materials.

Types	Steel plate material	Standard	Anchor material	Standard
WELDA®	S355J2 + N (black)	EN 10025-2	SD1 (black steel)	EN ISO 13918
WELDA® R	1.4301 (stainless)	EN 10088-2	SD1 (black steel)	EN ISO 13918
WELDA® Rr	1.4301 (stainless)	EN 10088-2	SD3 (stainless steel)	EN ISO 13918
WELDA® A	1.4401 (acid-proof)	EN 10088-2	SD1 (black steel)	EN ISO 13918
WELDA® Ar	1.4401 (acid-proof)	EN 10088-2	SD3 (stainless steel)	EN ISO 13918
WELDA® Strong	S355J2 + N (black)	EN 10025-2	B500B (black steel)	EN 10080
WELDA® Strong R	1.4301 (stainless)	EN 10088-2	B500B (black steel)	EN 10080
WELDA® Strong Rr	1.4301 (stainless)	EN 10088-2	Gr 500 [1)] (stainless steel)	BS 6744
WELDA® Strong A	1.4401 (acid-proof)	EN 10088-2	B500B (black steel)	EN 10080
WELDA® Strong Ar	1.4401 (acid-proof)	EN 10088-2	Gr 500 [1)] (stainless steel)	BS 6744

SD1: $f_{yk} \geq 350$ N/mm^2, $f_{uk} \geq 450$ N/mm^2, A5 ≥ 15 %
SD3: $f_{p0,2} \geq 350$ N/mm^2, $f_{uk} \geq 500$ N/mm^2, A5 ≥ 25 %

[1)] Anchors from stainless material Gr 500 are not covered by ETA-16/0430, but those can be manufactured by request.

WELDA® Anchor Plates are also available in other material grades on special request as modified anchor plate (see Section 1.3.1.). Please contact Fastcon Sales to inquire about other material grades.

Naming of WELDA® Anchor Plates:
WELDA BxL-H [type: -/R/Rr/A/Ar]

Examples of naming:
WELDA 100x100-68
WELDA 100x100-68 R
WELDA 100x100-68 Rr
WELDA 100x100-68 A
WELDA 100x100-68 Ar
WELDA Strong 200x200-220
WELDA Strong 200x200-220 R
WELDA Strong 200x200-220 A

Surface treatment for the standard WELDA® Anchor Plate: protection painting 40 µm. Epoxy painting or galvanizing on request. Anchor plates that are made of stainless steel (WELDA® R/Rr/A/Ar) are not painted.

Table 3. Dimensions, number of studs (n_x, n_y) and weight of WELDA® Anchor Plates.

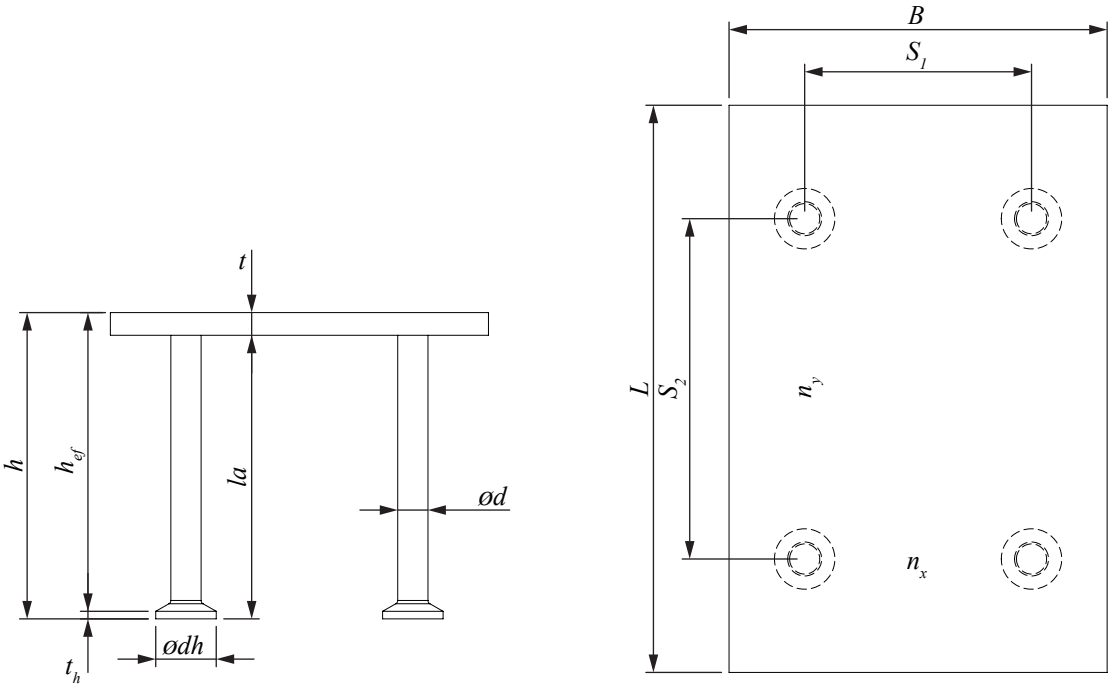

WELDA *B* × *L* - *H*	*B*	*L*	*H*	*t*	h_{ef}	s_1	s_2	*Ød*	n_x	n_y	Weight
	[mm]										[kg]
WELDA 50×100-68	50	100	68	8	61	0	60	10	1	2	0.4
WELDA 50×100-108	50	100	108	8	101	0	60	10	1	2	0.5
WELDA 100×100-68	100	100	68	8	61	60	60	10	2	2	0.8
WELDA 100×100-108	100	100	108	8	101	60	60	10	2	2	0.9
WELDA 100×150-70	100	150	70	10	63	60	90	10	2	2	1.4
WELDA 100×150-110	100	150	110	10	103	60	90	10	2	2	1.5
WELDA 100×200-72	100	200	72	12	64	70	120	13	2	2	2.2
WELDA 100×200-112	100	200	112	12	104	70	120	13	2	2	2.4
WELDA 100×200-162	100	200	162	12	154	70	120	13	2	2	2.6
WELDA 100×300-165	100	300	165	15	157	60	180	16	2	2	4.6
WELDA 150×150-70	150	150	70	10	63	90	90	10	2	2	2.0
WELDA 150×150-110	150	150	110	10	103	90	90	10	2	2	2.1
WELDA 150×150-162	150	150	162	12	154	90	90	13	2	2	2.8
WELDA 200×200-72	200	200	72	12	64	120	120	13	2	2	4.1
WELDA 200×200-112	200	200	112	12	104	120	120	13	2	2	4.3
WELDA 200×200-162	200	200	162	12	154	120	120	16	2	2	4.9
WELDA 200×300-165	200	300	165	15	157	120	180	16	2	2	8.2
WELDA 250×250-165	250	250	165	15	157	170	170	16	2	2	8.5
WELDA 300×300-165	300	300	165	15	157	180	180	16	2	2	11.7

Table 4. Dimensions, number of studs (n_x, n_y) and weight of Long WELDA® Anchor Plates.

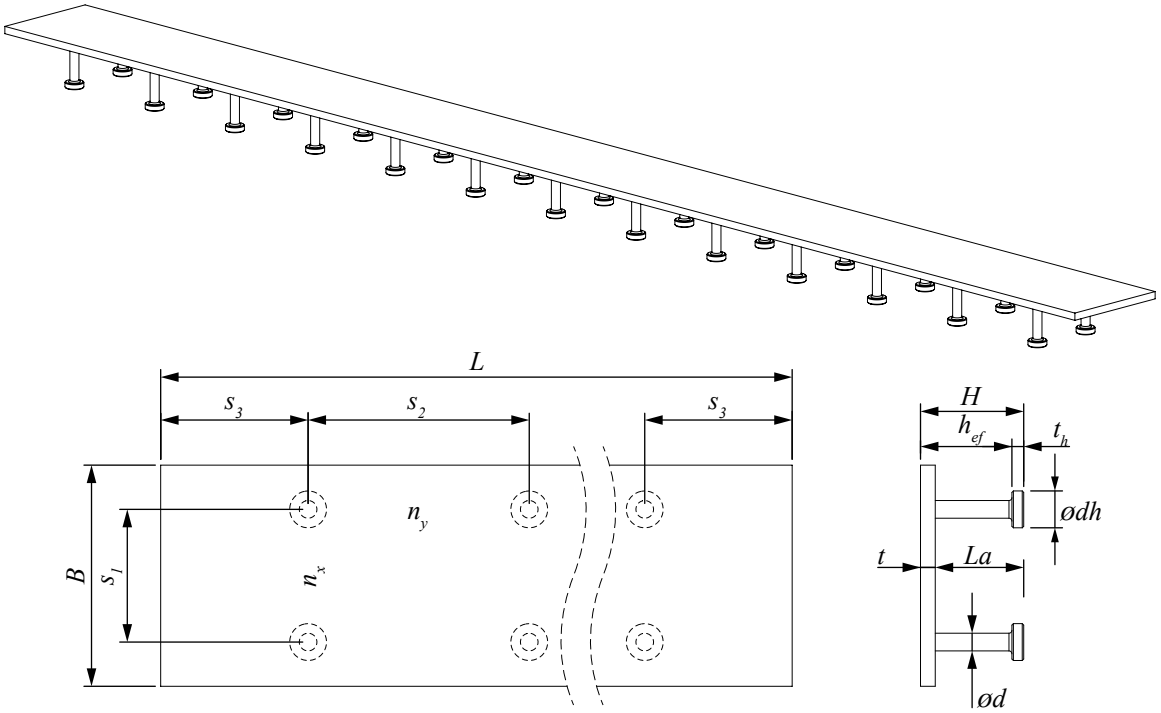

WELDA *B* × *L* - *H*	*B*	*L*	*H*	*t*	h_{ef}	s_1	s_2	*Ød*	n_x	n_y	Weight
	[mm]										[~kg/m]
WELDA 100×L1-70	100	L1	70	10	62	70	150	13	2	3...13	8.9
WELDA 150×L1-70	150	L1	70	10	62	90	150	13	2	3...13	12.8
WELDA 200×L1-70	200	L1	70	10	62	100	150	13	2	3...13	16.8
WELDA 100×L2-115	100	L2	115	15	107	60	200	16	2	3...10	13.8
WELDA 150×L2-115	150	L2	115	15	107	90	200	16	2	3...10	19.6
WELDA 200×L2-115	200	L2	115	15	107	100	200	16	2	3...10	25.5
WELDA 300×L2-115	300	L2	115	15	107	200	200	16	2	3...10	37.3
WELDA 400×L2-120	400	L2	120	20	112	200	200	16	2	3...10	64.8
WELDA 300×L2-225	300	L2	225	25	215	100	200	19	3	3...10	66.3
WELDA 400×L2-225	400	L2	225	25	215	150	200	19	3	3...10	85.9
WELDA 500×L2-225	500	L2	225	25	215	200	200	19	3	3...10	106
WELDA 600×L2-225	600	L2	225	25	215	250	200	19	3	3...10	125

L1 = 450/600/750/900/1050/1200/1350/1500/1650/1800/1950/2000 mm
L2 = 600/800/1000/1200/1400/1600/1800/2000 mm

Table 5. Dimensions, number of studs (n_x, n_y) and weight of WELDA® Strong Anchor Plates.

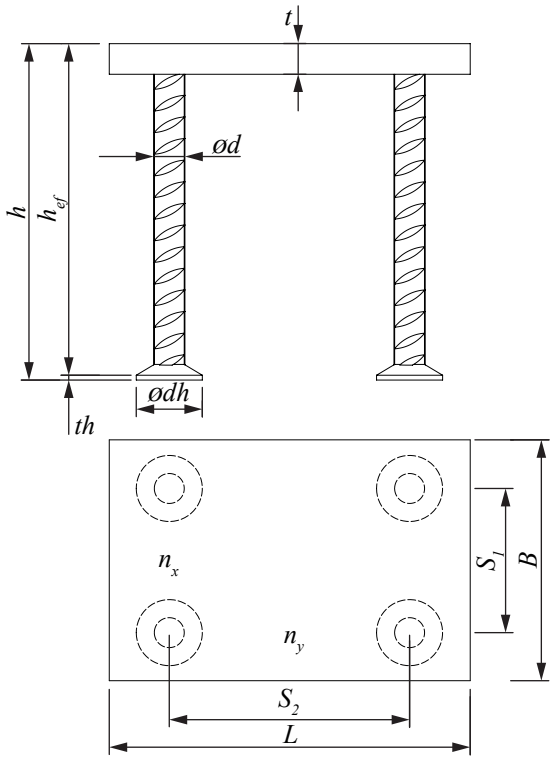

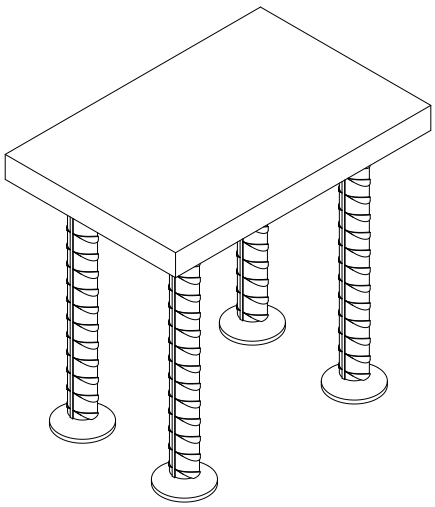

WELDA Strong WS *B* × *L* - *H*	*B*	*L*	*H*	*t*	h_{ef}	s_1	s_2	*d*	n_x	n_y	Mass
	[mm]										[kg]
WS 150×150-220	150	150	220	25	216	90	90	16	2	2	5.8
WS 150×150-285	150	150	285	25	281	90	90	16	2	2	6.3
WS 150×200-220	150	200	220	25	216	100	120	20	2	2	8.1
WS 150×200-355	150	200	355	25	351	100	120	20	2	2	9.5
WS 150×250-220	150	250	220	25	216	100	190	20	2	2	9.6
WS 150×250-355	150	250	355	25	351	100	190	20	2	2	10.9
WS 200×200-220	200	200	220	25	216	120	120	20	2	2	10.1
WS 200×200-355	200	200	355	25	351	120	120	20	2	2	11.4
WS 200×250-220	200	250	220	25	216	120	190	20	2	2	12.1
WS 200×250-355	200	250	355	25	351	120	190	20	2	2	13.4
WS 200×300-280	200	300	280	25	276	120	200	25	2	2	16.2
WS 200×300-435	200	300	435	25	431	120	200	25	2	2	18.6
WS 250×250-220	250	250	220	25	216	190	190	20	2	2	14.5
WS 250×250-355	250	250	355	25	351	190	190	20	2	2	15.8
WS 300×300-280	300	300	280	25	276	200	200	25	2	2	22.1
WS 300×300-435	300	300	435	25	431	200	200	25	2	2	24.5
WS 300×500-280	300	500	280	30	276	200	133	25	2	4	44.0
WS 300×500-435	300	500	435	30	431	200	133	25	2	4	48.7
WS 400×400-280	400	400	280	30	276	300	300	25	2	2	42.0
WS 400×400-435	400	400	435	30	431	300	300	25	2	2	44.4
WS 500×500-280	500	500	280	30	276	400	400	25	2	2	63.2
WS 500×500-435	500	500	435	30	431	400	400	25	2	2	65.6
WS 600×600-280	600	600	280	30	276	500	500	25	2	2	89.1
WS 600×600-435	600	600	435	30	431	500	500	25	2	2	91.5

1.3.1 MODIFIED WELDA® Anchor Plates

WELDA® Anchor Plates can be modified to offer an optimized solution for different needs.
The Betoniyhdistys (Finnish Concrete Association) product declaration does not apply to modified WELDA® anchor plates. Resistances can be checked using Fastcon technical support.

The elements that can be modified are:
1) Plate dimensions
- Thickness ***t***: 8/10/12/15/20/25/30 mm
- Width ***B***: 50...2000 mm
- Length ***L***: 100...6000 mm

2) Head anchors
- Number and positions of anchors
- Diameters ***Ød***: 10/13/16/19/(22/25) mm
- Length ***La***: 50...600 mm

3) Holes
- Number and position of holes
- Diameter of holes

4) Steel grade
- Generally available steel grades

= *according to selected anchor*
= *can be selected from list*
= *can be changed*

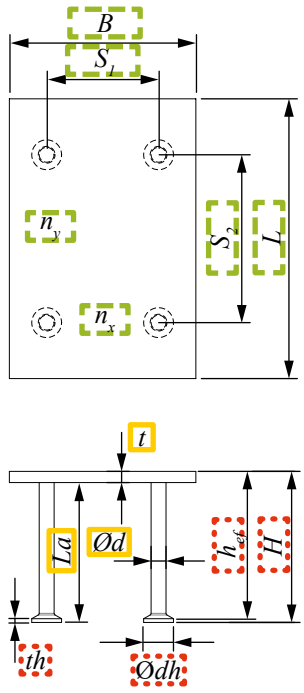

PSS Smooth Stud
(Black, SD1, EN ISO 13918)
PSS-type headed studs for modified anchor plates

Type	PSS 10	PSS 13	PSS 16	PSS 19
Ød [mm]	10	13	16	19
Ødh [mm]	19	25	32	32
s_{min} [mm]	50	70	80	100
Possible lengths of anchors ***La*** [mm] Standard length = Recommended lengths	50	50	50	75
	60	60	75	80
	75	75	100	90
	100	100	125	100
	125	125	150	125
	150	150	175	150
	175	175	200	175
		200	225	200
			250	225
			275	250
			300	275
			350	300
				350

Modified WELDA® Anchor Plates must be named so that they will not be confused with standard WELDA® Anchor Plates. Additionally, the manufacturing parameters on the drawing must show the plate dimensions, size, and placing of studs and materials, etc. Further information about modification possibilities is available at Fastcon Sales.

Naming the product: ***WELDA MODIFIED [project specific unique number or name]***

Examples:
WELDA MODIFIED 1234
WELDA MODIFIED 25×600×2000+30d16-150

1.3.2 MODIFIED WELDA® Strong Anchor Plates

WELDA® Strong Anchor Plates can be modified to offer an optimized solution for different needs. Resistances can be checked using Fastcon technical support.

The elements that can be modified are:

1) Plate dimensions
   - Thickness ***t***: 25/30/35/40/45/50/60/70/80 mm
   - Width ***B***: 150...2000 mm
   - Length ***L***: 150...6000 mm
2) Headed rebar anchors
   - Number and positions of anchors
   - Diameters ***Ød***: 16/20/25/(32/40) mm
   - Length ***Lb***: 50/75/100...800/1000 mm
3) Holes
   - Number and position of holes
   - Diameter of holes
4) Steel grade
   - Generally available steel grades

= *according to selected anchor*
= *can be selected from list*
= *can be changed*

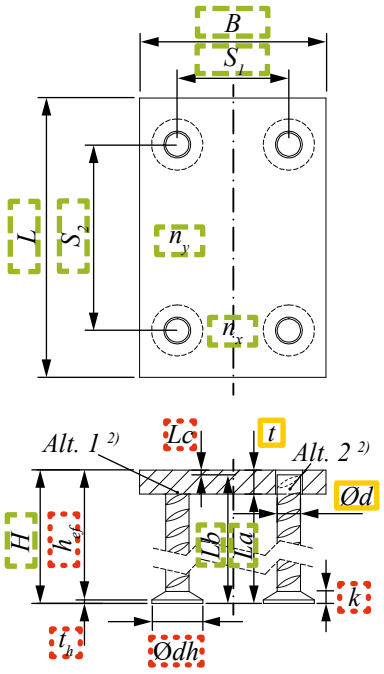

PHRA Headed Rebar Anchor
(Black, B500B, EN10080)
PHRA-type anchors for modified anchor plates

Type	PHRA 16	PHRA 20	PHRA 25	PHRA 32 [1]	PHRA 40 [1]
Ød [mm]	16	20	25	32	40
k [mm]	10	12	13	15	18
t_h [mm]	4	4	4	4	4
Ødh [mm]	38	46	55	70	90
s_{min} [mm]	80	100	100	130	150
$L_{a,min} = L_{b,min}$	50	75	75	100	100
$L_{a,max} = L_{b,max}$	800	800	1000	1000	1000
L_c [mm]	5	5	5	0	0
H Standard heights [mm]	220	220	280		
	285	355	435	500	700
La [mm]	***La = H - t***				
Lb [mm]	***Lb = H - Lc***				

[1] Diameters 32 and 40 are not included in ETA-16/0430, but can be manufactured on request.
[2] According to ETA-16/0430, PHRA anchors can be welded to WELDA® Strong Anchor Plates in two alternative ways. Fastcon chooses the most suitable production method:
   - Alt. 1: PHRA anchors are welded to the surface of steel plate. The steel plates have Z25 validation (e.g. EN 10025-2 S355J2+N + EN 10164 - Z25).
   - Alt. 2: PHRA anchors are welded into the hole in the plate.

Modified WELDA® Strong Anchor Plates must be named so that they will not be confused with standard WELDA® Strong Anchor Plates. Additionally, the manufacturing parameters on the drawing must show the plate dimensions, size, and placing of studs and materials, etc. Further information about modification possibilities is available at Fastcon technical support.

Naming the product: ***WELDA Strong MODIFIED [project specific unique number or name]***

Examples:
WELDA Strong MODIFIED 1234
WELDA Strong MODIFIED 25x600x2000+30d16-150

1.3.3 Shear Anchors (SA) to WELDA® and WELDA® Strong Anchor Plates

If concrete edge failure limits the capacity of WELDA® or WELDA® Strong Anchor Plate, additional shear anchors (B500B) welded behind the steel plate can be provided to increase the shear resistance of the Anchor Plate.

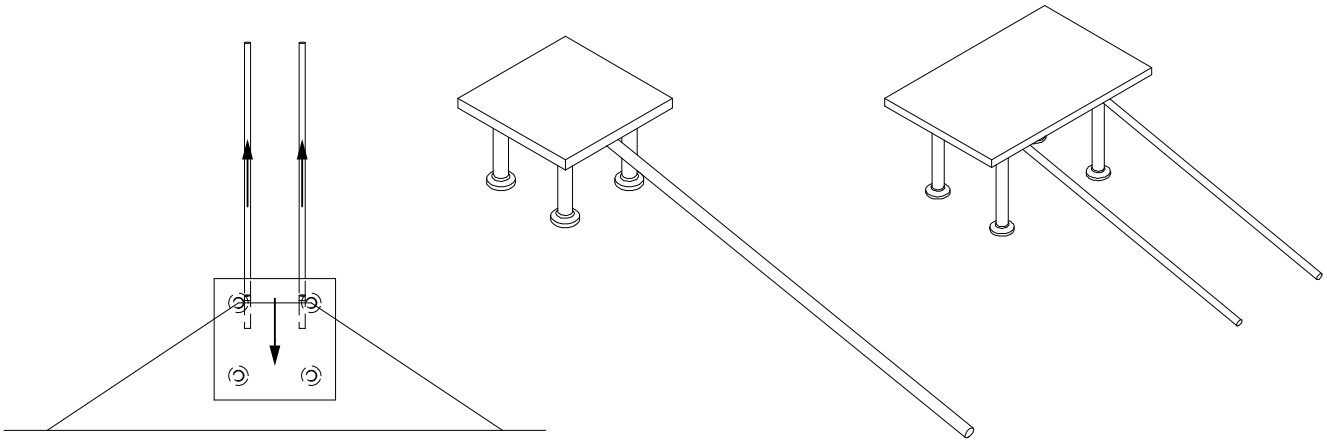

Figure 5. Shear Anchors (SA) increase the shear resistance of the Anchor Plate near the edge of the concrete structure.

For more information, see: Appendix C – Shear Anchors (SA) to WELDA® and WELDA® Strong Anchor Plates.

1.4 Manufacturing

Plates are cut mechanically or by thermal cutting. The dimensional tolerances correspond to EN ISO 9013-442. For standard anchor plates, the maximum tolerance for the B and L dimensions is ± 3 mm. Exceptional tolerance when L = 2000 +0/-10 mm.

The anchors are welded by arc stud welding or MAG welding. The location tolerance for anchors is ± 5 mm and the tolerance for straightness ± 3. The tolerance for total height H is ± 5 mm.

For modified WELDA® as well as for long WELDA® anchor plates tolerances correspond to EN ISO 13920-CG.

Fastcon's production units are externally controlled and periodically audited on the basis of production certifications and product approvals by various independent organizations.

Products are marked with the CE mark, the emblem, the type of the product, and the day of manufacturing.

2. Resistances

2.1 Resistance without supplementary reinforcement

The resistances of WELDA® Anchor Plates are determined by a design concept that makes reference to the following standards:

- EN 1992-4:2018, Eurocode 2. Design of concrete structures. Part 4: Design of fastenings for use in concrete.
- EN 1992-1-1:2004, Design of concrete structures: General rules and rules for buildings
- EN 1993-1-1:2005, Design of steel structures: General rules and rules for buildings
- EN 1993-1-8:2005, Design of steel structures: Part 1-8: Design of joints

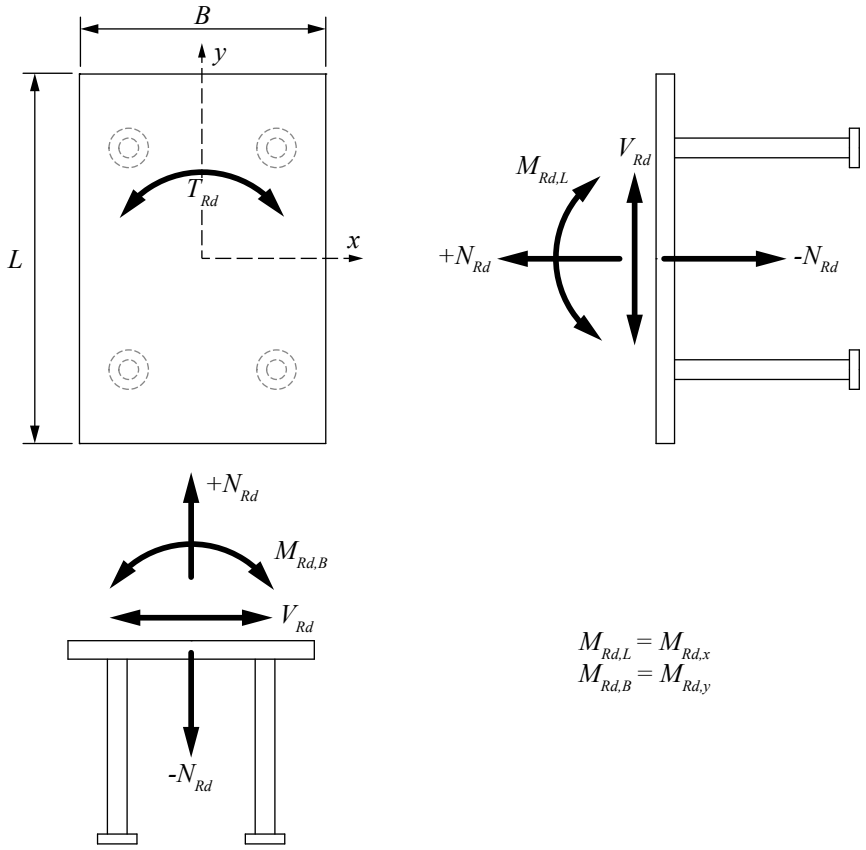

Figure 6. Symbols and direction of the actions.

Assumptions for pre-calculated resistances (*Tables 6*, *7* and *8*):

- Concrete **C25/30**, cracked, without supplementary reinforcement
- Manufacturing and installation tolerances (10 % from plate side dimension, max 20 mm) have been taken into account
- The plate is far enough away from the edges so the edge does not fail
- Calculations have been made for static loads according to EN 1992-4
- Minimum fastening areas are calculated for steel plate material S355J2 + N

The resistances of the anchor plates can be checked by Fastcon technical support. This is particularly recommended if:

- There are interactions of forces
- The edge distances might limit resistances
- The installation tolerances are greater than 10 % from the plate side dimension (max 20 mm)
- The anchor plate is modified

Table 6. Maximum resistances and minimum fastening area when only one single action is active.

WELDA $B \times L - H$	Tension resistance	Shear resistance	Moment resistance	Moment resistance	Torsion resistance	Min fast. area (plate S355)
	$+N_{Rd}$	V_{Rd}	$M_{Rd,L}$	$M_{Rd,B}$	T_{Rd}	for M_{Rd}
	[kN]	[kN]	[kNm]	[kNm]	[kNm]	[mm × mm]
WELDA 50×100-68	10.4	18.1	0.79	0.30	0.91	5×65
WELDA 50×100-108	24.6	24.6	1.5	0.4	0.98	20×80
WELDA 100×100-68	16.5	29.2	1.0	1.0	1.7	48×48
WELDA 100×100-108	38.2	47.7	2.5	2.5	2.8	78×78
WELDA 100×150-70	19.4	35.5	1.6	1.3	2.5	34×84
WELDA 100×150-110	42.3	49.6	3.9	2.8	3.5	60×120
WELDA 100×200-72	22.9	43.9	2.4	1.5	3.8	20×105
WELDA 100×200-112	47.3	84.9	5.4	3.3	7.4	30×155
WELDA 100×200-162	75.7	89.0	6.4	5.3	7.7	50×160
WELDA 100×300-165	83.8	140.4	13.8	5.6	16.0	46×260
WELDA 150×150-70	21.7	42.4	1.9	1.9	3.4	55×55
WELDA 150×150-110	45.8	52.8	4.3	4.3	4.2	113×113
WELDA 150×150-162	74.5	90.6	7.2	7.2	7.1	115×115
WELDA 200×200-72	27.2	55.8	2.9	2.9	5.6	40×40
WELDA 200×200-112	53.4	95.5	6.3	6.3	9.5	130×130
WELDA 200×200-162	82.8	143.2	10.1	10.1	14.3	157×157
WELDA 200×300-165	93.3	145.7	15.9	11.7	18.3	115×222
WELDA 250×250-165	99.6	150.2	15.2	15.2	20.3	169×169
WELDA 300×300-165	102.8	151.1	17.8	17.8	21.5	201×201

Note:

- When many load actions are active simultaneously, interactions must be taken into account. It can be calculated using Fastcon technical support.
- The mounting area depends on the direction and magnitude of the load.
- Welds can be taken into account when calculating the minimum fastening area (see Fig. 7. Welds can be taken into consideration)
- Compressive resistance can be calculated using Fastcon technical support.

Figure 7. Welds can be taken into account in minimum fastening areas.

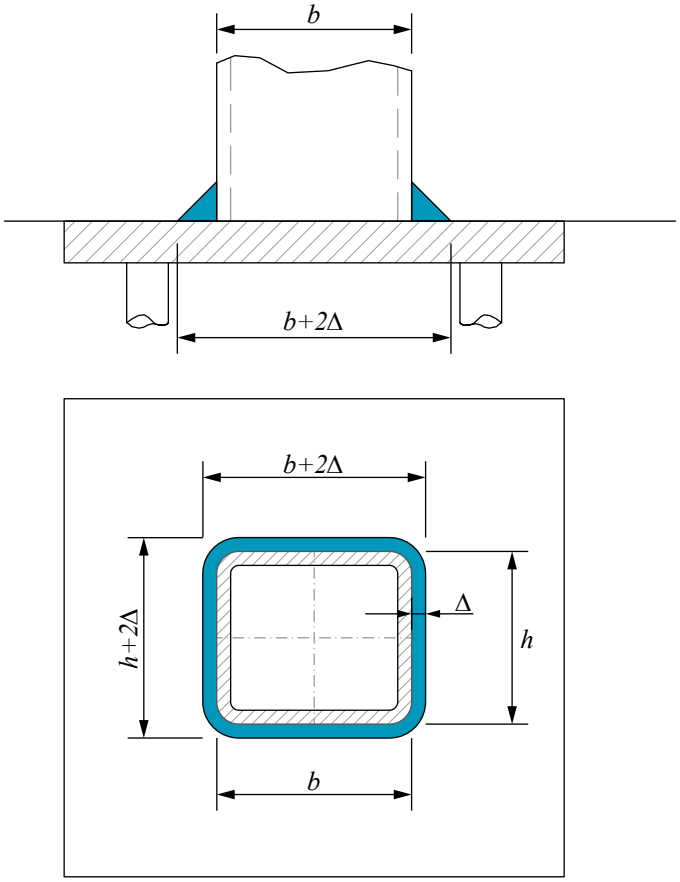

Table 7. Maximum resistances per stud row.

WELDA $B \times L - H$	Tension with 20 mm eccentricity	Shear without eccentricity	Minimum fast. area (directions: $B \times L$)*)
	$N_{Rd,row}$	$V_{Rd,row}$	for $N_{Rd,row}$
	[kN]	[kN]	[mm × mm]
WELDA 100×L1-70	10.7	24.0	10×104
WELDA 150×L1-70	11.6	28.1	10×70
WELDA 200×L1-70	12.0	29.1	25×35
WELDA 100×L2-115	21.6	47.3	60×140
WELDA 150×L2-115	23.3	52.4	10×95
WELDA 200×L2-115	23.9	53.7	10×51
WELDA 300×L2-115	29.5	66.4	87×11
WELDA 400×L2-120	29.8	66.8	20×20
WELDA 300×L2-225	35.8	76.0	20×20
WELDA 400×L2-225	40.0	85.0	20×20
WELDA 500×L2-225	44.2	94.0	140×10
WELDA 600×L2-225	48.5	103.0	270×10

*) Needed fastening area depends on the size of the steel profile, eccentricity of profile, type and direction of loading. Needed fastening area can be calculated using Fastcon technical support.

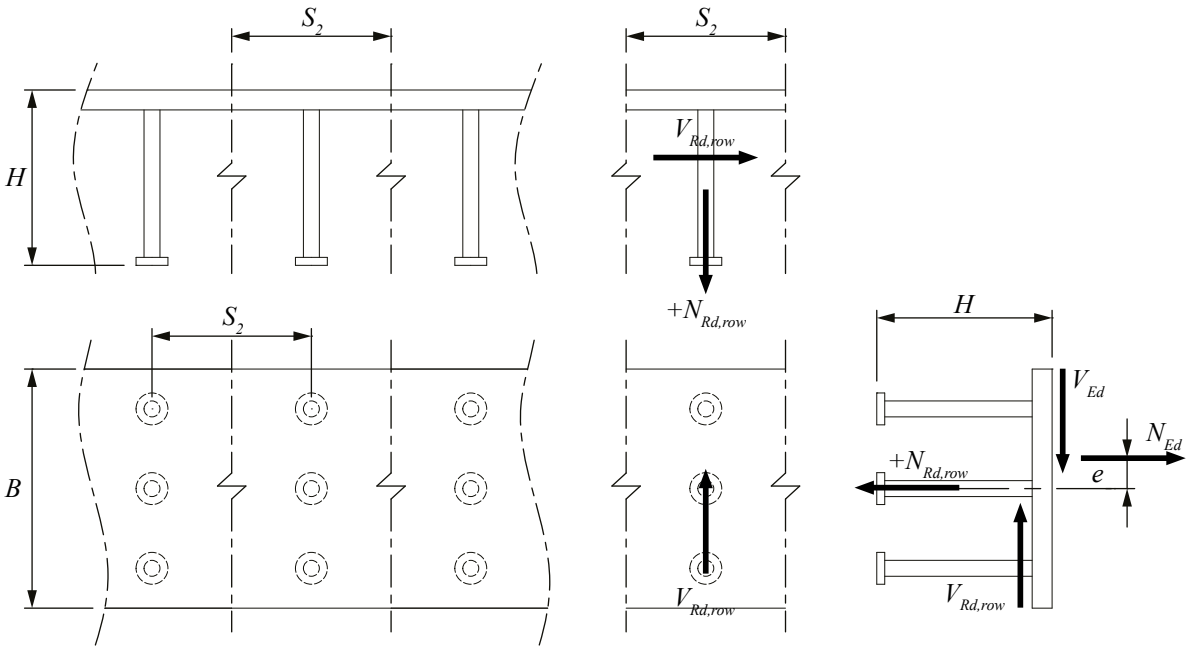

Figure 8. Values in Table 7 are given per one stud row. Resistance of the whole plate can be calculated by using Fastcon technical support. The dimensions of Long WELDA® Anchor Plates are given in the Table 4.

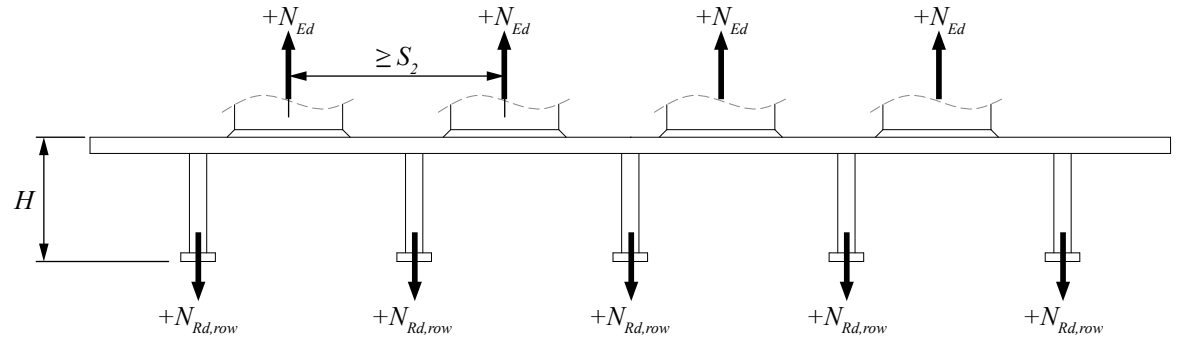

Figure 9. Maximum number (n_y-1) of pre-calculated resistances (see Table 7), where n_y = number of stud rows.

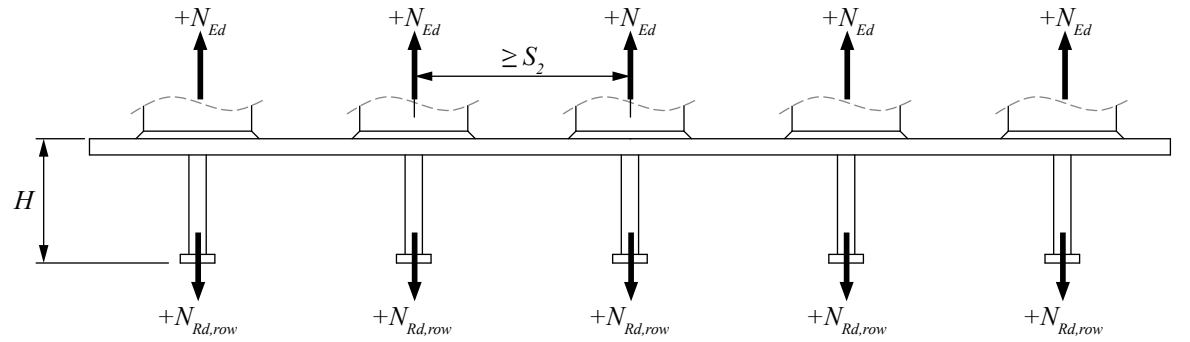

Figure 10. Maximum number (n_y) of pre-calculated resistances (see Table 7) if the load goes directly to the anchors.

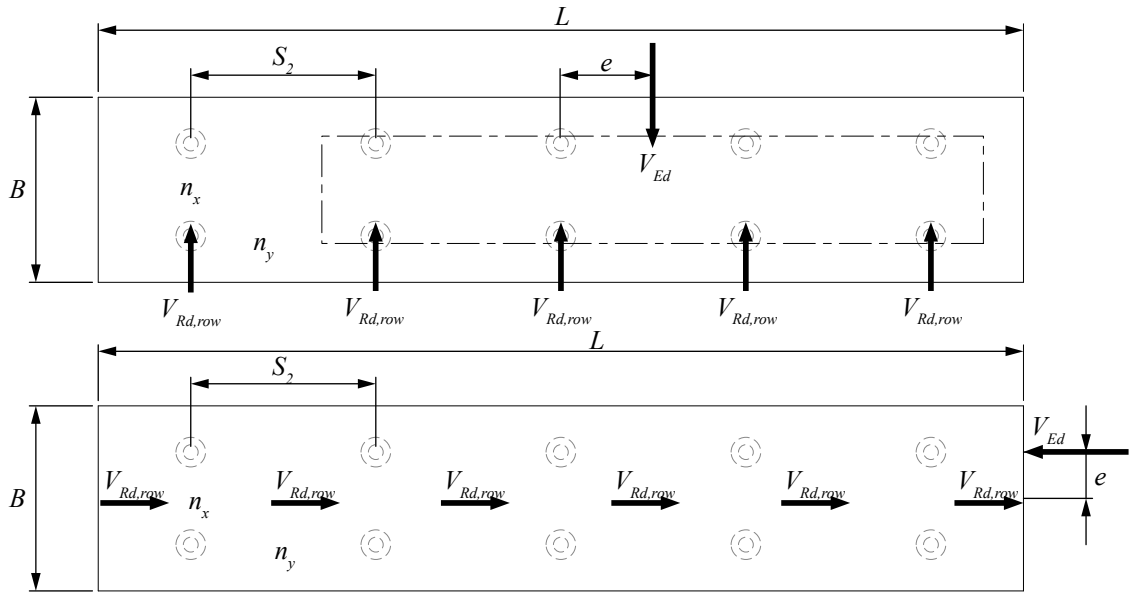

Figure 11. The eccentricity of the load affects how load is shared/distributed to anchors. The shear resistance values in Table 6 are without eccentricity ($e = 0$). Values with eccentricity can be calculated by using Fastcon technical support.

Table 8. Maximum resistances and minimum fastening area when only one single action is active.

WELDA Strong WS B×L-H	Tension resistance	Shear resistance	Moment resistance	Moment resistance	Torsion resistance	Min. fast. Area (plate S355)
	$+N_{Rd}$	V_{Rd}	$M_{Rd,L}$	$M_{Rd,B}$	T_{Rd}	for M_{Rd}
	[kN]	[kN]	[kNm]	[kNm]	[kNm]	[mm × mm]
WS 150×150-220	120	142	11.4	11.4	11.2	50×50
WS 150×150-285	171	142	15.6	15.6	11.2	80×80
WS 150×200-220	127	223	15.3	12.4	21.0	50×90
WS 150×200-355	239	227	30.5	24.3	21.5	95×140
WS 150×250-220	138	235	21.2	13.4	29.5	85×140
WS 150×250-355	254	235	42.7	25.8	29.5	85×190
WS 200×200-220	130	233	16.0	16.0	23.3	60×60
WS 200×200-355	244	233	31.1	31.1	23.3	130×130
WS 200×250-220	142	238	22.7	17.5	30.9	50×110
WS 200×250-355	259	238	44.1	33.3	30.9	120×180
WS 200×300-280	193	352	35.1	24.4	47.2	80×180
WS 200×300-435	340	375	65.2	43.5	50.4	130×225
WS 250×250-220	155	247	25.0	25.0	36.9	90×90
WS 250×250-355	274	247	47.3	47.3	36.9	165×165
WS 300×300-280	209	391	38.7	38.7	61.1	145×145
WS 300×300-435	359	391	70.3	70.3	61.1	210×210
WS 300×500-280	250	500	65.2	47.9	98.0	150×340
WS 300×500-435	402	765	116	77.5	123	190×395
WS 400×400-280	252	404	61.9	61.9	91.5	140×140
WS 400×400-435	409	404	108	108	91.5	245×245
WS 500×500-280	298	411	87.3	87.3	122	200×200
WS 500×500-435	462	411	150	150	122	315×315
WS 600×600-280	349	415	117	117	152	270×270
WS 600×600-435	518	415	197	197	152	395×395

2.2 Resistance with supplementary reinforcement

Supplementary reinforcement in form of stirrups can be used to increase the resistances of WELDA® Anchor Plates in following cases:

- Tensile and bending resistance of WELDA® is limited by concrete cone failure
- Shear resistance of WELDA® is limited due to concrete edge breakout

Design rules for supplementary reinforcement used against tensile and shear failure of anchors are specified in EN 1992-4. These rules are relatively conservative, mainly due to the lack of general knowledge about the behaviour of headed anchors with supplementary reinforcement. For this reason, the real performance of WELDA® Anchor Plates under tensile and shear loads has been investigated by an extensive testing program. This program allowed to demonstrate the real capacities of WELDA® Anchor plates with supplementary reinforcement. B

ased on the tests, a new calculation model was created for WELDA® Anchor Plates with supplementary reinforcement. The new resistances and required supplementary reinforcement are specified in Annex A1 and Annex B2. The new resistances are significantly larger than those determined by EN 1992-4.

A comparison of resistances of several models of WELDA® Anchor Plates with and without supplementary reinforcement in *Figure 12* and *Figure 13*.

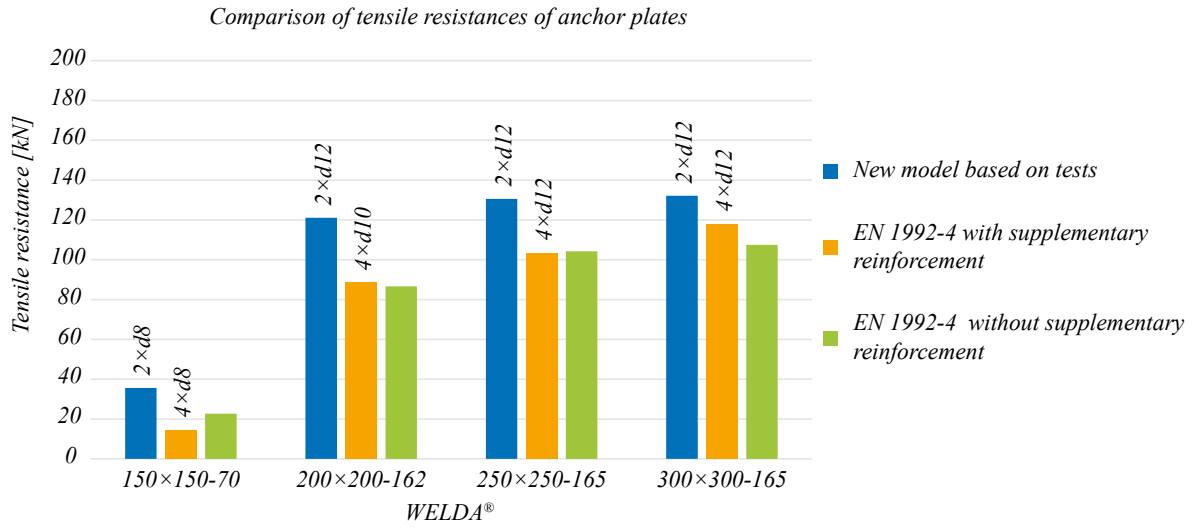

Figure 12. Tensile resistances of WELDA® Anchor Plates according to different calculation methods

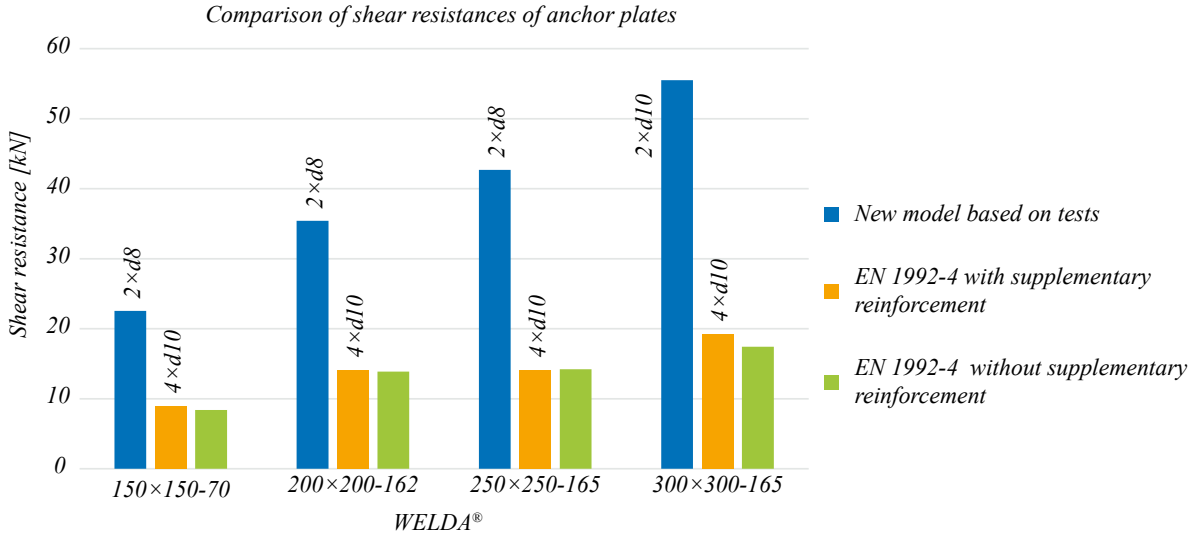

Figure 13. Shear resistance of WELDA® Anchor Plate according to different calculation methods.

2.3 Required verification for WELDA® Anchor Plates loaded in tension

Table 9. Required verifications for headed anchors loaded in tension.

Failure mode	Example	Most loaded anchor	Anchor group
Steel strength of anchor	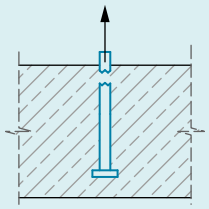	$N_{Ed}^{h} \leq N_{Rd,s} = \frac{N_{Rk,s}}{\gamma_{Ms}}$	
Pull-out strength of anchor	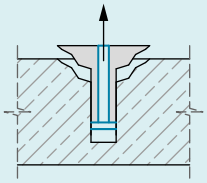	$N_{Ed}^{h} \leq N_{Rd,p} = \frac{N_{Rk,p}}{\gamma_{Mp}}$	
Concrete cone strength [1]	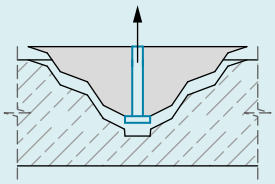		$N_{Ed}^{g} \leq N_{Rd,c} = \frac{N_{Rk,c}}{\gamma_{Mc}}$
Splitting strength [2]	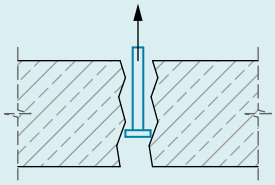		$N_{Ed}^{g} \leq N_{Rd,sp} = \frac{N_{Rk,sp}}{\gamma_{Msp}}$
Blow-out strength [3]	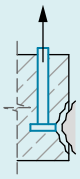		$N_{Ed}^{g} \leq N_{Rd,cb} = \frac{N_{Rk,cb}}{\gamma_{Mc}}$

[1] Not required if supplementary reinforcement is provided according to Appendix A1.
[2] Not required if the edge distance in all directions $c \geq 1{,}5h_{ef}$ for groups with one anchor and $c \geq 1{,}8h_{ef}$ for groups with more than one anchor or if supplementary reinforcement provided according to Appendix A2.
[3] Not required if the edge distance in all directions $c \geq 0.5\ h_{ef}$.

2.4 Required verification for WELDA® Anchor Plates loaded in shear

Table 10. Required verifications for headed anchors loaded in shear

Failure mode	Example	Most loaded anchor	Anchor group
Steel strength of anchor	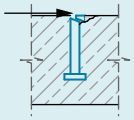	$V_{Ed}^{h} \le V_{Rd,s} = \frac{V_{Rk,s}}{\gamma_{Ms}}$	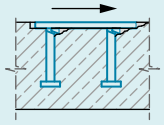
Concrete edge strength [1] • Shear perpendicular to the edge • Shear parallel to the edge • Inclined shear	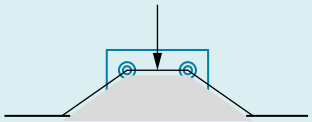  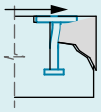		$V_{Ed}^{g} \le V_{Rd,c} = \frac{V_{Rk,c}}{\gamma_{Mc}}$
Concrete pry-out strength	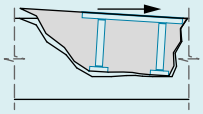		$V_{Ed}^{g} \le V_{Rd,cp} = \frac{V_{Rk,cp}}{\gamma_{Mc}}$

[1] Not required if the edge distances in all directions $c \ge min(10h_{ef}; 60Ø)$ or if supplementary reinforcement is provided according to Annex B2.

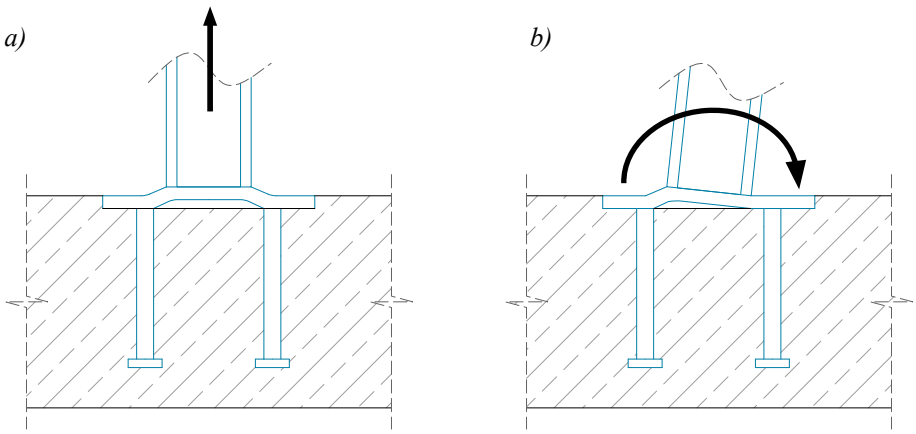

Figure 14. Plate verification for a) tension force and b) bending moment.

2.5 Combined axial and shear load

When axial and shear forces strain the headed stud simultaneously the interaction should be checked by satisfying the following equations for different failure modes. The combined axial and shear load can be easily checked using the Fastcon technical support service.

WITH RESPECT TO STEEL VERIFICATIONS

Headed Anchors
The simultaneous **tensile** force and **shear** force in each headed stud shall satisfy the condition:

$$\left|\beta_N\right|^2 + \left|\beta_V\right|^2 \le 1$$

EN 1992-4, Eq. (7.54)

where

$$\beta_N = \frac{\left|N_{Ed}^1\right|}{N_{Rd}} \le 1 \quad \text{and} \quad \beta_V = \frac{\left|V_{Ed}^1\right|}{V_{Rd}} \le 1$$

where

N_{Ed}^1 = axial tension force in the most loaded headed stud
V_{Ed}^1 = shear force in the most loaded headed stud
N_{Rd} = axial resistance of headed stud
V_{Rd} = shear resistance of headed stud

WITH RESPECT TO CONCRETE VERIFICATIONS

Anchors without supplementary reinforcement
The simultaneous **tensile** force and **shear** force shall satisfy either one or both of following conditions:

$$\left|\beta_N\right|^{1.5} + \left|\beta_V\right|^{1.5} \le 1$$

EN 1992-4, Eq. (7.55)

$$\left|\beta_N\right| + \left|\beta_V\right| \le 1.2$$

EN 1992-4, Eq. (7.56)

WELDA® Anchors with supplementary reinforcement
For anchors with a supplementary reinforcement to take up tension and/or shear loads, Equation (7.57) should be used with the largest value of β_N and β_V for the different failure modes.

$$\left|\beta_N\right|^{k11} + \left|\beta_V\right|^{k11} \le 1$$

EN 1992-4, Eq. (7.57)

In the equations Eq. (47) – (49):
β_N = largest degree of utilization under tensile force
β_V = largest degree of utilization under shear force
$k11$ = 1.2 according to tests for WELDA® Anchor Plates

WELDA® Strong Anchors with supplementary reinforcement
For anchors with a supplementary reinforcement to take up tension or shear loads only, Equation (7.57) should be used with the largest value of βN and βV for the different failure modes.

$$\left|\beta_N\right|^{2/3} + \left|\beta_V\right|^{2/3} \le 1$$

EN 1992-4, Eq. (7.57)

Selecting of WELDA® Anchor Plate

The following aspects must be considered when selecting the appropriate type of WELDA® Anchor Plate:

1. Type of loading and load cases: N_{Ed}, M_{xEd}, M_{yEd}, V_{xEd}, V_{yEd}, T_{Ed}. In the case of seismic, dynamic and fatigue loads, contact Fastcon's technical customer service.
2. Direction of loading
3. Dimensions of steel profile or member
4. Eccentricity of the steel profile: ex, ey
5. Dimensions and edge distances of base structure
6. Concrete class of base structure
7. Cracked/uncracked concrete
8. Existing and supplementary reinforcement
9. Environmental conditions and exposure class: Dry internal/External atmospheric

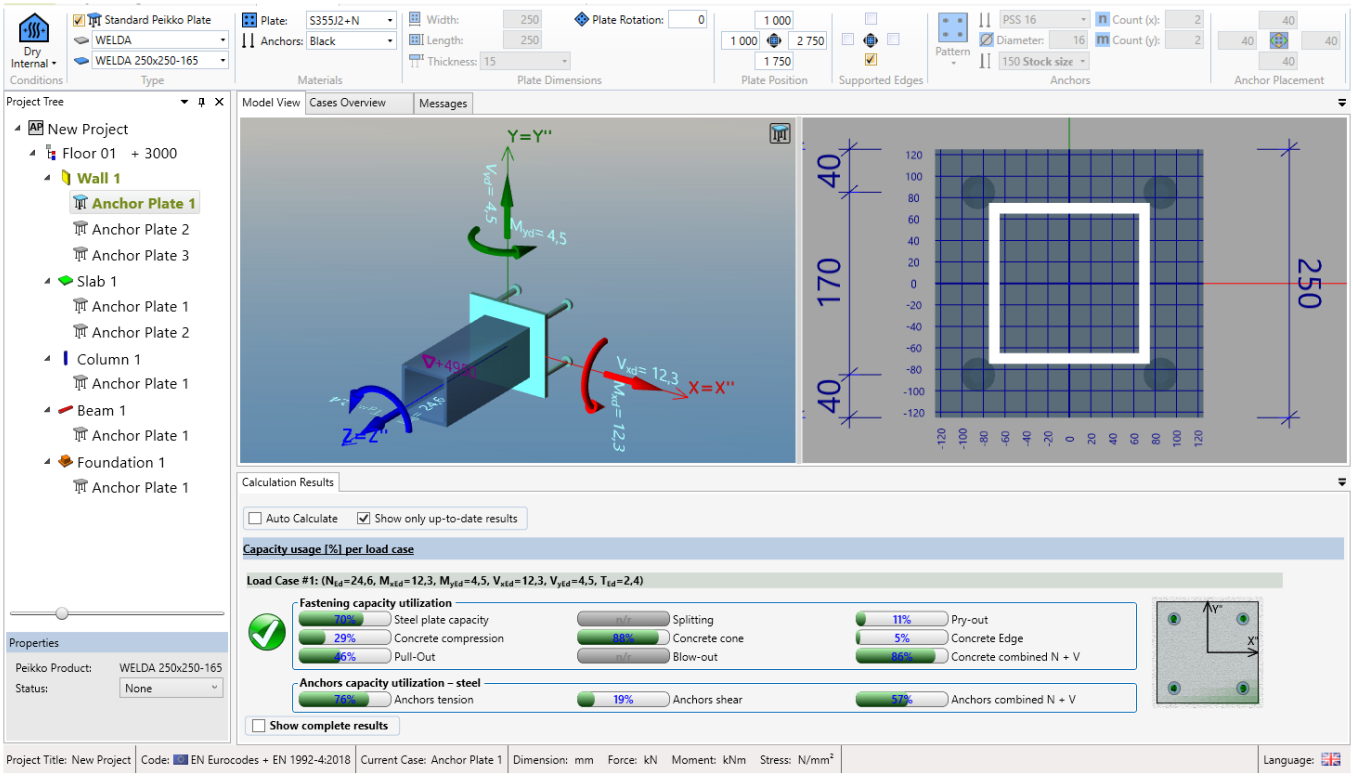

Figure 15.

Annex A – Tension and moment resistance of WELDA® Anchor Plate with supplementary reinforcement

A1: Tensile and bending resistance with supplementary reinforcement

In case the concrete cone failure limits the tensile or bending capacity of WELDA® Anchor Plate, supplementary reinforcement for the tension load can be provided to increase the resistance of the assembly. The supplementary reinforcement is typically provided in form of stirrups with shapes specified on *Figure 16*. The stirrups used as supplementary reinforcement have to be placed as close as possible to the headed anchors and plate.

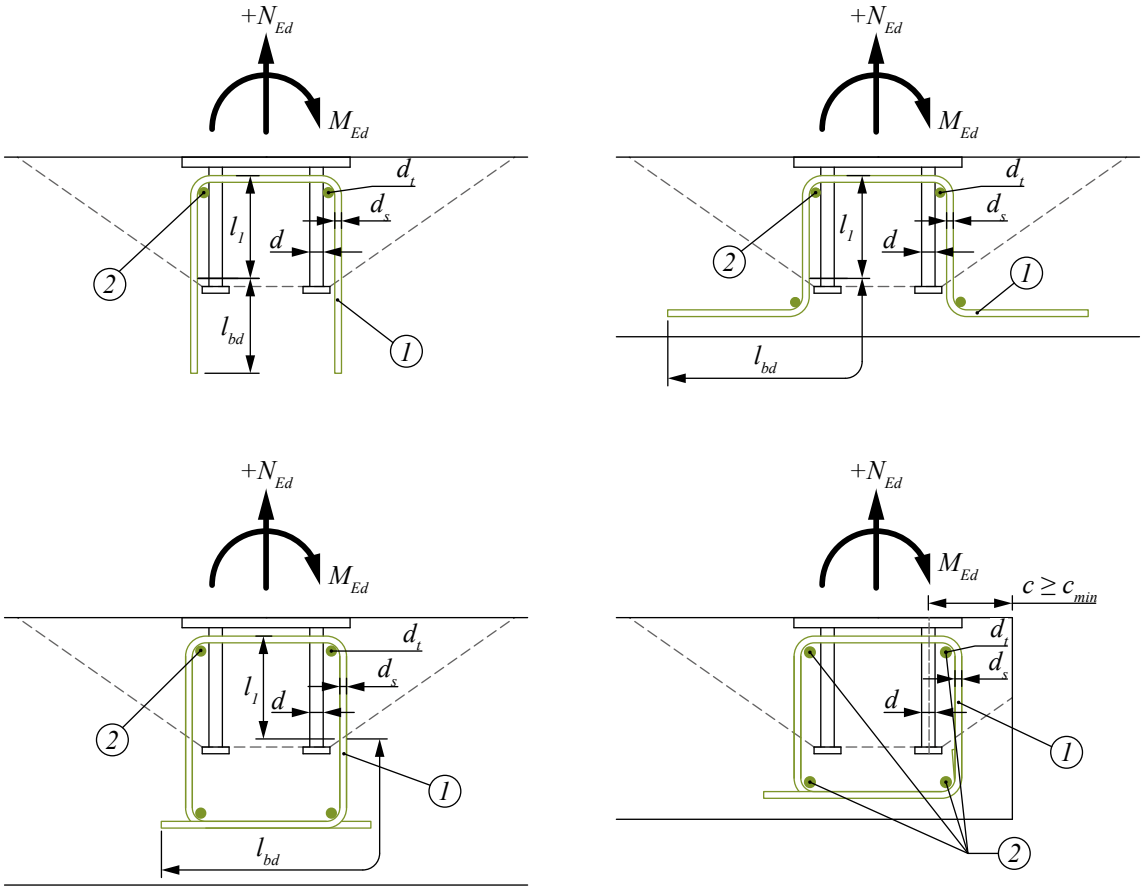

Figure 16. Supplementary hanger reinforcement alternatives for concrete cone reinforcement.

Where:

① = supplementary hanger reinforcement, diameter d_s
② = transverse/main reinforcement of concrete structure, diameter d_t ($d_t \geq d_s$)
l_1 = anchorage length of supplementary reinforcement in the concrete failure cone, $l_1 \geq 4d_s$
l_{bd} = design anchorage length of supplementary reinforcement in base structure
Minimum mandrel diameter for bending of supplementary reinforcement $d_{m,min} = 4d_s$ according to EN 1992-1-1:2004, Table 8.1N
Note: The values of $d_{m,min}$ for use in a Country may be found in its National Annex

Table 11. Tensile resistance of WELDA® Anchor Plate with supplementary reinforcement

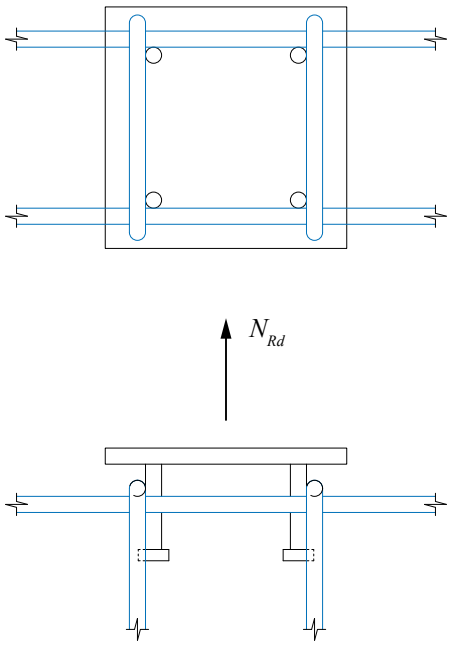

2 stirrups/anchor plate
(1 stirrup/anchor row)

		Number of supplementary reinforcement	Tensile resistance
		$n_{st} \times d_s$	N_{Rd} [kN]
WELDA® Anchor Plate	50×100-68	2×d8	28.3
	50×100-108	2×d8	32.4
	100×100-68	2×d8	32.7
	100×100-108	2×d8	55.7
	100×150-70	2×d8	34.4
	100×150-110	2×d8	57.7
	100×200-72	2×d10	45.0
	100×200-112	2×d10	59.8
	100×200-162	2×d10	98.9
	100×300-165	2×d12	106.4
	150×150-70	2×d8	35.6
	150×150-110	2×d8	59.5
	150×150-162	2×d10	102.0
	200×200-72	2×d10	47.1
	200×200-112	2×d10	62.9
	200×200-162	2×d12	121.0
	200×300-165	2×d12	127.4
	250×250-165	2×d12	130.6
	300×300-165	2×d12	132.1

Table 12. Tensile resistance of WELDA® Anchor Plate with supplementary reinforcement

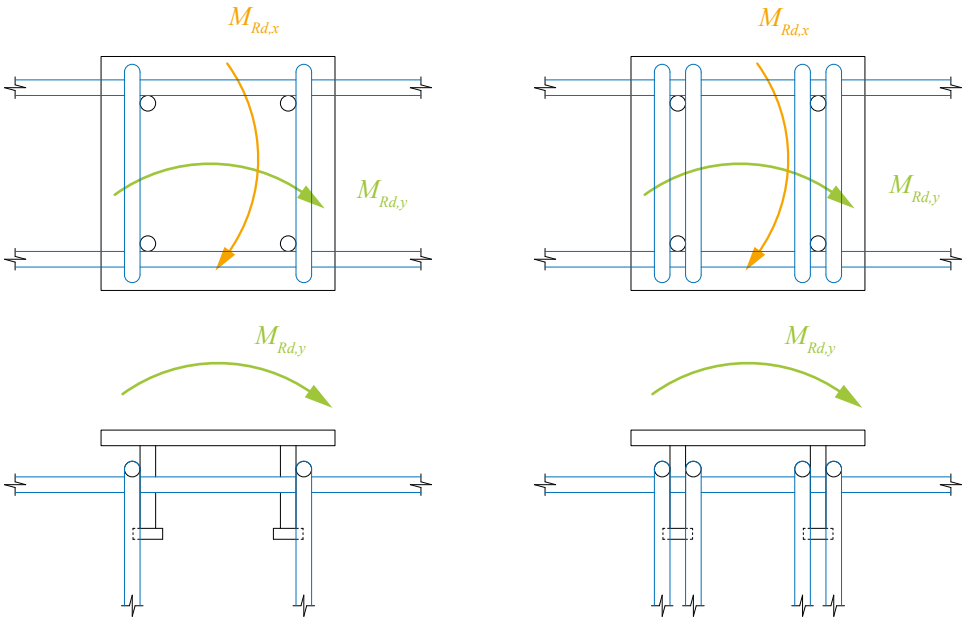

2 stirrups/anchor plate (1 stirrup/anchor row)

4 stirrups/anchor plate (2 stirrups/anchor row)

		Alternative 1			Alternative 2			Min. fast. area (plate S355) for M_{Rd}
		Number of supplementary reinforcement	*Bending resistance*		*Number of supplementary reinforcement*	*Bending resistance*		
		$n_{st} \times d_s$	$M_{Rd,x}$ [kNm]	$M_{Rd,y}$ [kNm]	$n_{st} \times d_s$	$M_{Rd,x}$ [kNm]	$M_{Rd,y}$ [kNm]	$b \times h^*$ [mm × mm]
WELDA® Anchor Plate	50×100-68	2×d8	1.22	0.39	-	-	-	5 × 98
	50×100-108	2×d8	1.57	0.72	-	-	-	5 × 98
	100×100-68	2×d8	1.35	1.35	-	-	-	48 × 38
	100×100-108	2×d8	2.50	2.50	4 x d8	3.15	3.15	48 × 56
	100×150-70	2×d8	2.14	1.49	-	-	-	34 × 22
	100×150-110	2×d8	3.94	2.84	4 x d8	4.82	3.22	55 × 87
	100×200-72	2×d10	3.54	2.01	-	-	-	50 × 80
	100×200-112	2×d10	6.04	3.41	4 x d8	7.49	4.18	50 × 112
	100×200-162	2×d10	9.14	5.33	4 x d8	10.66	5.80	50 × 101
	100×300-165	2×d12	15.39	5.65	4 x d10	19.29	6.95	50 × 102
	150×150-70	2×d8	2.28	2.28	-	-	-	55 × 27
	150×150-110	2×d8	4.34	4.34	4 x d8	4.92	4.92	55 × 70
	150×150-162	2×d10	7.16	7.16	4 x d8	8.17	8.17	80 × 102
	200×200-72	2×d10	3.90	3.90	-	-	-	40 × 75
	200×200-112	2×d10	6.61	6.61	4 x d8	8.11	8.11	150 × 101
	200×200-162	2×d12	10.73	10.73	4 x d10	13.36	13.36	150 × 135
	200×300-165	2×d12	16.73	11.69	4 x d10	20.76	14.38	108 × 278
	250×250-165	2×d12	15.29	15.29	4 x d10	18.83	18.83	110 × 114
	300×300-165	2×d12	17.86	17.86	4 x d10	21.97	21.97	255 × 297

* Minimum fastening area should follows rules presented in *Figure 7*.

Note: Tensile and bending resistances of anchor plate with supplementary reinforcement are determined for 25mm concrete cover of supplementary reinforcement.

Table 13. Hanger reinforcement (B500B) per anchor based on steel tension resistance of WELDA® Strong anchors.

Diameter of the headed stud	d	[mm]	16	20	25
Tension resistance of headed stud	$N_{Rd,s}$	[kN]	79	123	193
Required cross-section area of hanger reinforcement	A_s	[mm^2]	182	284	444
Selected reinforcement (legs/stud)	$n \times d_s$	[mm]	2 × 12	2 × 14	3 × 14
Alternative reinforcement (legs/stud)	$n \times d_s$	[mm]	4 × 8	4 × 10	4 × 12

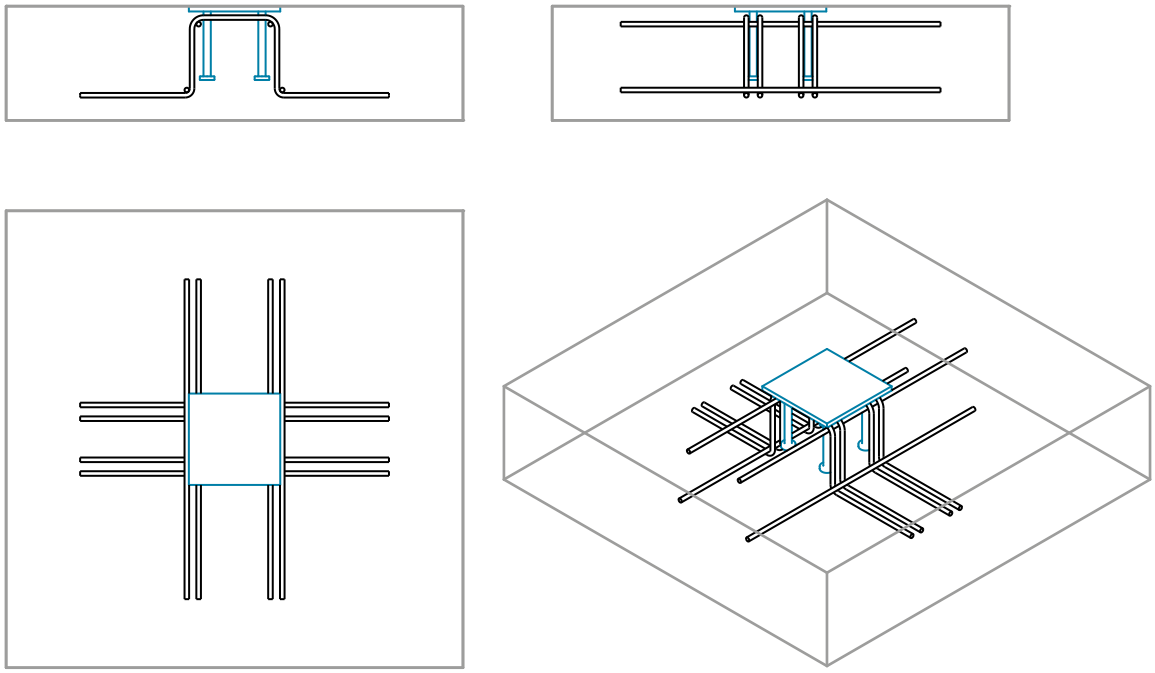

Figure 17. Supplementary hanger reinforcement when anchor is far from the edges ($c \geq 1{,}5\ h_{ef}$).

A2: Splitting reinforcement

If the splitting resistance is exceeded, supplementary reinforcement near the concrete side and top face surface should be provided to resist the splitting forces and to limit cracks. Details of the reinforcement for WELDA® Anchor Plates are shown in the following figure. The required numbers of reinforcement bars are given in *Table 14*. Existing surface reinforcement can be used as splitting reinforcement if it is not used fully for other purposes and the total utilization ratio is ≤ 1.

The required cross-section A_s of the splitting reinforcement may be determined as follows:

$$A_s = 0.5 \frac{\sum N_{Ed}}{f_{yk} / \gamma_{Ms,re}} [mm^2]$$

EN 1992-4, Eq. (7.22)

where

$\sum N_{Ed}$ = sum of the design tensile forces of the anchors in tension under the design value of the actions [N]

f_{yk} = nominal yield strength of the reinforcing steel ≤ 500 N/mm²

$\gamma_{Ms,re}$ = partial safety factor for steel failure of supplementary reinforcement = 1.15

Table 14. Splitting reinforcement per anchor row (B500B).

	Headed stud diameter [mm]	A_s [mm²]	Example for selected reinforcement
WELDA®	10	26	1 Ø 6
	13	45	1 Ø 8
	16	67	1 Ø 10
	19	95	1 Ø 12
	22	128	1 Ø 14 or 2 Ø 10
	25	165	1 Ø 16 or 2 Ø 12
WELDA® Strong	16	91	1 Ø 12
	20	142	1 Ø 14 or 2 Ø 10
	25	222	2 Ø 12

Placement of reinforcement:

- Splitting reinforcement must be evenly placed along the critical edge(s)* on the side and top faces of concrete member.
  *** The distance from the edge of the concrete surface to the center of the nearest anchor in tension smaller than 1,8h h_{ef}.**
- Bars against splitting must be located inside the effective reinforcement zone (i.e. within a distance ≤1,5 h_{ef} from the anchor in tension).
- Pos.① is the **side-face reinforcement** of the critical edge or edges of the same direction.
- Pos.② is the **top-face reinforcement** of the critical edge or edges of the same direction.
- **NOTE:** Perpendicular edges should be considered independently (i.e. A_s per direction).

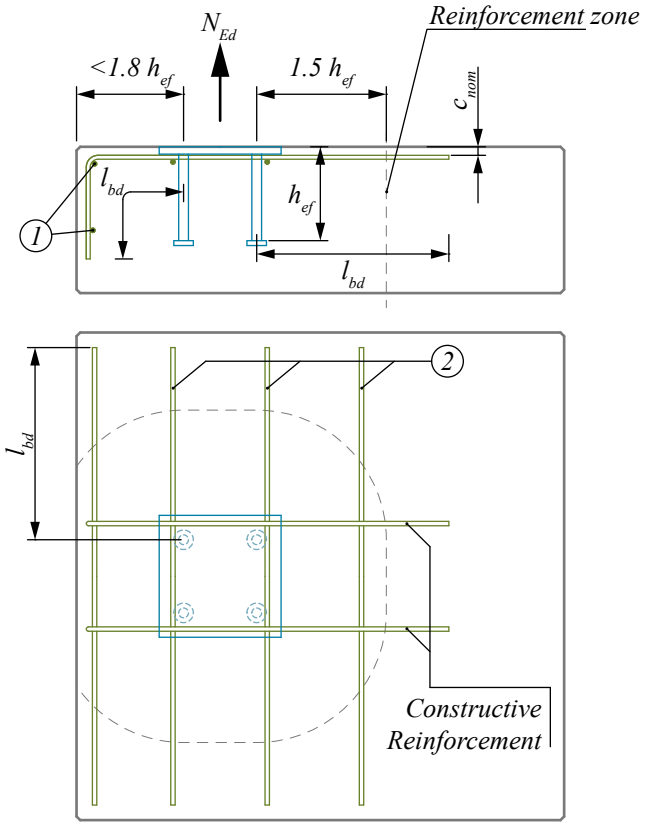

Figure 18. Detail for splitting reinforcement.

Annex B – Shear resistance of WELDA® Anchor Plate with supplementary reinforcement

B1: Shear resistance of WELDA® Anchor Plates with supplementary reinforcement

If case the presence of a concrete edge limits the capacity of WELDA® Anchor Plate, supplementary reinforcement can be provided to increase the shear resistance of the assembly. The supplementary reinforcement is typically provided in form of stirrups with shapes specified on *Figure 19*. The stirrups used as supplementary reinforcement have to be placed as close as possible to the headed anchors.

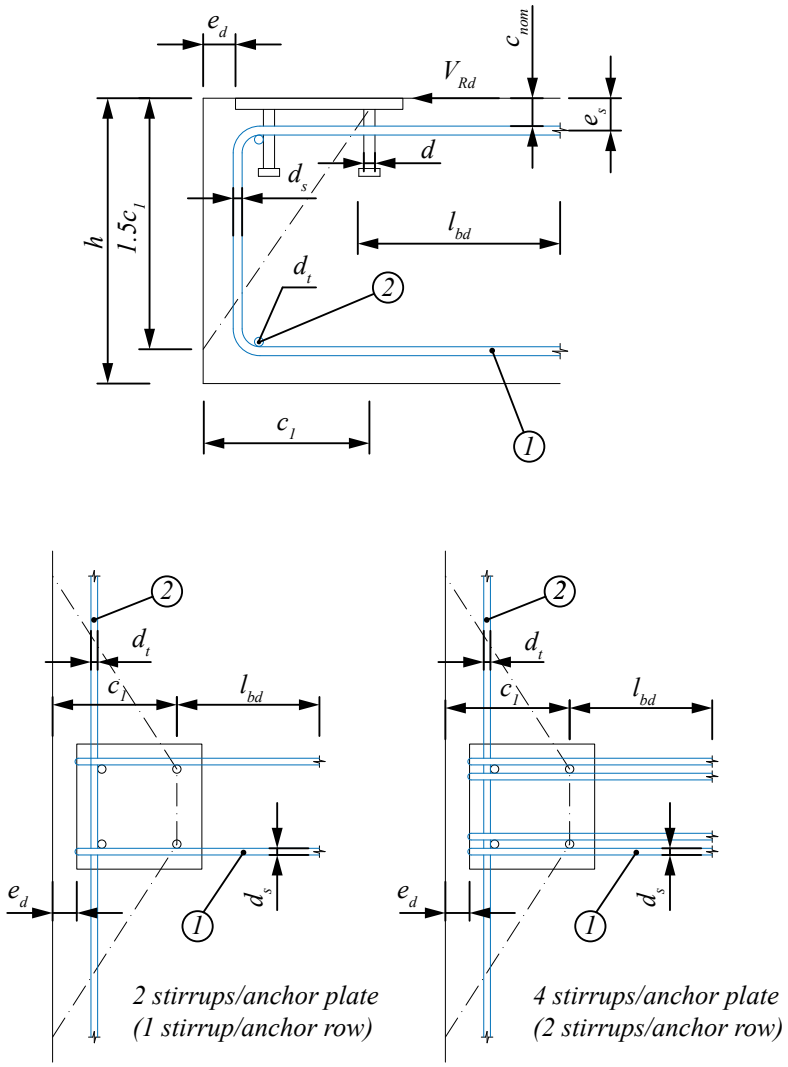

Figure 19. Supplementary reinforcement against shear failure at close position to free edge.

Where:

① = supplementary hanger reinforcement, diameter d_s
② = transverse/main reinforcement of concrete structure, diameter d_t ($d_t \geq d_s$)
l_1 = anchorage length of supplementary reinforcement in the concrete failure cone, $l_1 \geq 4d_s$
l_{bd} = design anchorage length of supplementary reinforcement in base structure

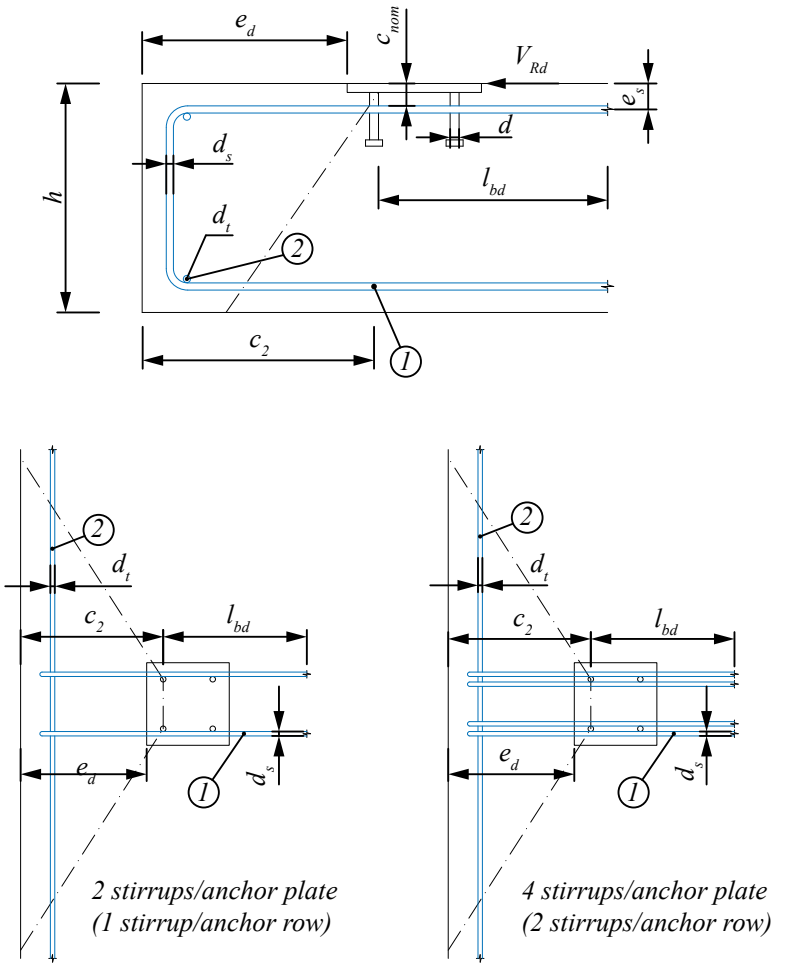

Figure 20. Supplementary reinforcement against shear failure at distance e_d from free edge.

Where:

① = supplementary hanger reinforcement, diameter d_s
② = transverse/main reinforcement of concrete structure, diameter d_t ($d_t \geq d_s$)
l_1 = anchorage length of supplementary reinforcement in the concrete failure cone, $l_1 \geq 4d_s$
l_{bd} = design anchorage length of supplementary reinforcement in base structure

Shear resistance of WELDA® Anchor Plate and related amount of stirrups is presented in *Table 15*.

Table 15. Shear resistance of WELDA® Anchor Plate with supplementary reinforcement.

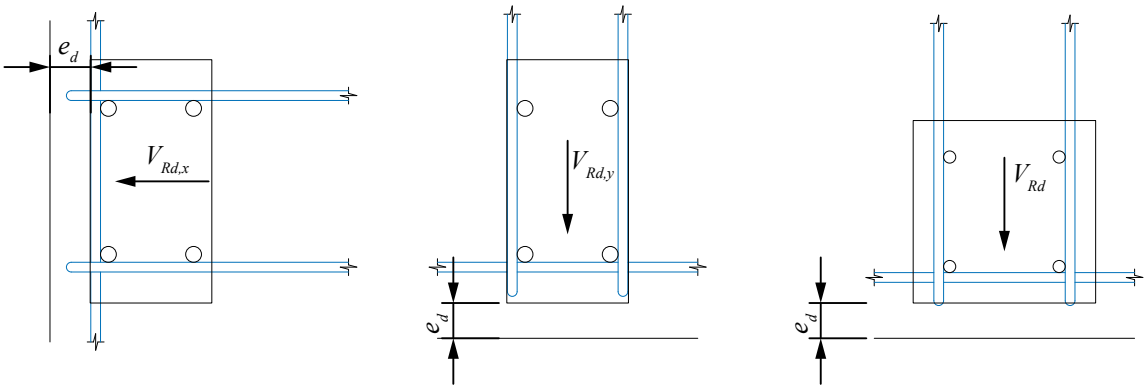

2 stirrups arrangement
(1 stirrup/anchor row)

		Number of supplementary reinforcement	Edge distance	Shear resistance close to the edge		Edge distance	Shear resistance	
		n_{st} x d_s	e_{d1} [mm]	$V_{Rd,x}$ [kN]	$V_{Rd,y}$ [kN]	e_{d2} [mm]	$V_{Rd,x}$ [kN]	$V_{Rd,y}$ [kN]
WELDA® Anchor Plate	50×100-68	2 × Ø8	50	10.2	12.7	305	20.4	20.4
	50×100-108	2 × Ø8	50	12.4	17.7	505	24.8	23.6
	100×100-68	2 × Ø8	50	16.9	16.9	305	27.1	27.1
	100×100-108	2 × Ø8	50	21.0	21.0	505	49.7	49.7
	100×150-70	2 × Ø8	50	18.8	20.1	315	30.4	30.4
	100×150-110	2 × Ø8	50	21.3	25.8	515	49.7	44.1
	100×200-72	2 × Ø8	60	21.7	23.7	390	34.2	34.2
	100×200-112	2 × Ø8	60	23.6	31.9	520	55.6	55.9
	100×200-162	2 × Ø8	70	27.9	36.8	770	74.2	71.2
	100×300-165	2 × Ø8	100	32.6	50.8	785	79.2	78.9
	150×150-70	2 × Ø8	50	22.5	22.5	315	34.1	34.1
	150×150-110	2 × Ø8	50	26.2	26.2	515	49.7	49.7
	150×150-162	2 × Ø8	50	29.6	29.6	770	74.8	74.8
	200×200-72	2 × Ø8	50	28.2	28.2	390	40.8	40.8
	200×200-112	2 × Ø8	50	31.4	31.4	520	56.5	56.5
	200×200-162	2 × Ø8	50	35.4	35.4	770	77.7	77.7
	200×300-165	2 × Ø8	50	36.5	45.6	785	80.9	80.7
	250×250-165	2 × Ø8	50	42.7	42.7	785	80.6	80.6
	300×300-165	2 × Ø10	50	55.5	55.5	785	96.5	96.5

Table 16. Assumed dimensions h_{min}, c_{nom} and e_s for concrete edge reinforcement (Table 15).

		h_{min} [mm]	c_{nom} [mm]	e_s [mm]
WELDA® Anchor Plate	50×100-68	140	35	39
	50×100-108	150	35	39
	100×100-68	140	35	39
	100×100-108	150	35	39
	100×150-70	140	35	39
	100×150-110	150	35	39
	100×200-72	140	35	39
	100×200-112	150	35	39
	100×200-162	200	35	40
	100×300-165	200	35	39
	150×150-70	140	35	39
	150×150-110	150	35	39
	150×150-162	200	35	40
	200×200-72	200	35	39
	200×200-112	150	35	39
	200×200-162	200	35	40
	200×300-165	200	35	40
	250×250-165	200	35	40
	300×300-165	200	35	40

B2: Edge reinforcement of WELDA® Strong Anchor Plates

If the edge failure verification under shear load shows insufficient resistance, supplementary reinforcement should be provided. Details of hanger reinforcement to prevent edge failure for WELDA® Strong Anchor Plates are shown in the following figures. The required numbers of U-stirrups are given in *Table 17*.

Table 17. Concrete edge reinforcement (B500B) based on steel shear resistance of headed stud.

	Headed stud diameter [mm]	U-Stirrups (per stud) ①	c_1 [mm]	c_{nom} [mm]	e_s [mm]
WELDA® Strong	16	2 Ø 12	50	35	47
	20	2 Ø 14	70	35	49
	25	3 Ø 16	70	35	59

Reinforcement from *Table 17* can be directly applied if the following conditions exist:

- The distance between the reinforcement and the shear force acting on a base plate is equal to or smaller than e_s
- The edge distance is equal or greater than c_1
- Minimum mandrel diameter for bending of supplementary reinforcement $d_{m,min} = 4\ d_s$ according to EN 1992-1-1:2004, Table 8.1N.
  Note: The values of $d_{m,min}$ for use in a Country may be found in its National Annex.

Figure 21. Illustration of detailing of the supplementary reinforcement in the form of loops ①.

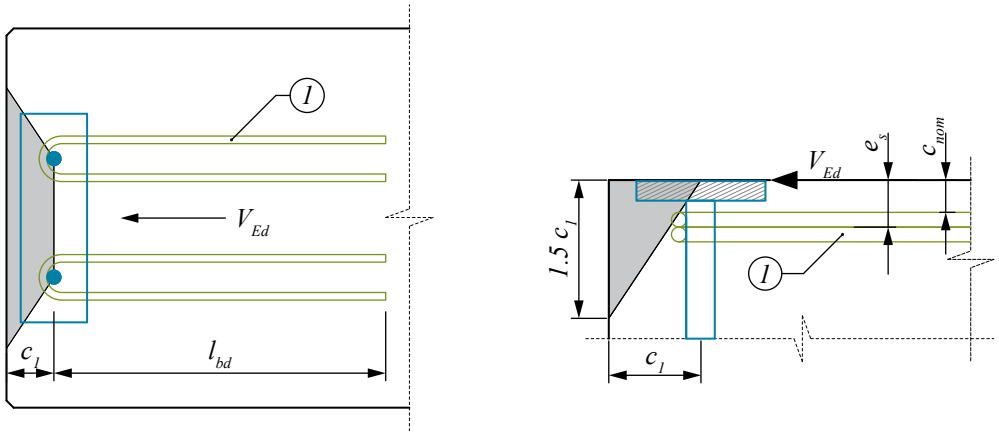

Annex C – Shear Anchors (SA) to WELDA® and WELDA® Strong Anchor Plates

Table 18. Shear resistances per one Shear Anchor (B500B) in C25/30 concrete.

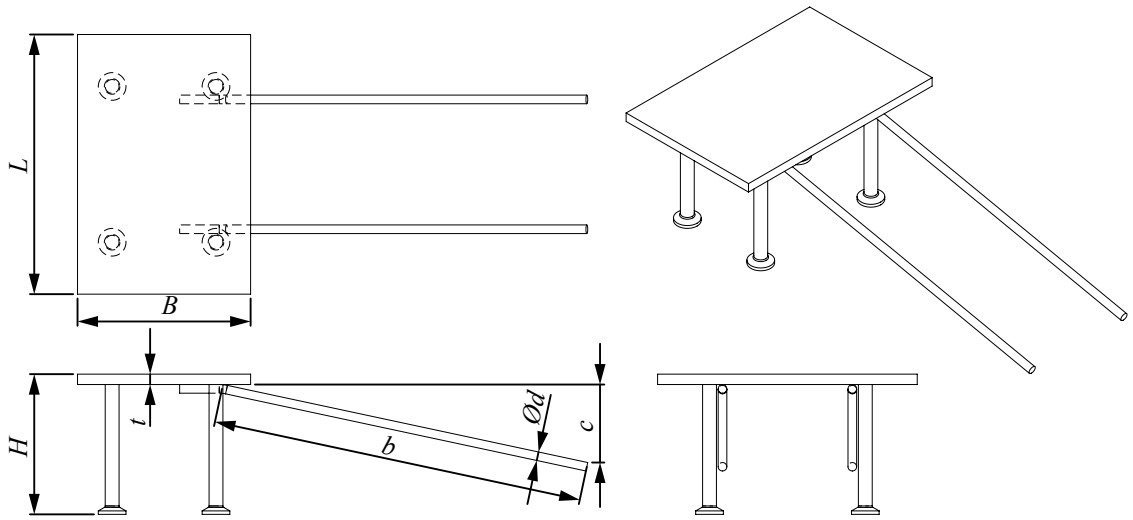

Shear resistance per one Shear Anchor $V_{Rd,SA}$ [kN] in C25/30 concrete								
		SA6	SA8	SA10	SA12	SA16	SA20	SA25
$Ød$	mm	6	8	10	12	16	20	25
b	mm	260	345	430	520	690	850	1070
c	mm	55	70	90	110	140	180	220
t_{min}	mm	6	8	10	10	15	20	25
α_2		0.73	0.73	0.73	0.74	0.74	0.73	0.73
$V_{Rd,SA}$ [1)]	kN	12.0	21.4	33.4	48.1	85.5	133	209

WELDA B×L-H + nSAd-b-c

WELDA B×L-H + nSA/HSAd-b-c

n = number of anchors
SA = Shear Anchor / HSA = Headed Shear Anchor (HSA will come later)
d = diameter of anchor
b = length of anchor
c = bending dimension

Examples:
WELDA 100×100-68 + 1SA8-350-70
WELDA 200×300-165 + 2SA10-430-90
WELDA Strong 600×600-280 + 3SA25-1070-220

[1)] The resistances $V_{Rd,SA}$ have been calculated according to standard EN 1992-1-1 using the values $Ød$, b, c, t_{min} and α_2 shown in *Table 18*.

Annex D – WELDA® Anchor Plates and types of environment and corrosion categories (informative)

	Product	Plate [3]	Anchors [3]		Suggested grades of stainless steel for atmospheric applications (EN 1993-1-4: 2006, Table A.1)											
					Type of environment and corrosion category											
				Dry internal	Rural			Urban			Industrial			Marine		
					L	M	H	L	M	H	L	M	H	L	M	H
1	WELDA® [1, 2]	P1	W1/W3	Y	X	X	X	X	X	X	X	X	X	X	X	X
2	WELDA® R [1]	P2	W1/W3	Y	Y	Y	Y	Y	Y	(Y)	(Y)	(Y)	X	Y	(Y)	X
3	WELDA® Rr	P2	W2/W4	O	Y	Y	Y	Y	Y	(Y)	(Y)	(Y)	X	Y	(Y)	X
4	WELDA® A [1]	P3	W1/W3	O	O	O	O	O	Y	Y	Y	Y	(Y)	Y	Y	(Y)
5	WELDA® Ar	P3	W2/W4	O	O	O	O	O	Y	Y	Y	Y	(Y)	Y	Y	(Y)
6	WELDA® Aa	P3	W5	O	O	O	O	O	Y	Y	Y	Y	(Y)	Y	Y	(Y)
7	WELDA® Strong [1, 2]	P1	W6	Y	X	X	X	X	X	X	X	X	X	X	X	X
8	WELDA® Strong R [1]	P2	W6	Y	Y	Y	Y	Y	Y	(Y)	(Y)	(Y)	X	Y	(Y)	X
9	WELDA® Strong A [1]	P3	W6	O	O	O	O	O	Y	Y	Y	Y	(Y)	Y	Y	(Y)

Corrosion conditions:

L = Low: Least corrosive conditions for that type of environment. For example, cases tempered by low humidity or low temperatures.

M = Mid: Fairly typical for that type of environment.

H = High: Corrosion likely to be higher than typical for that type of environment. For example, increased by persistent high humidity, high ambient temperatures or particularly aggressive air pollutants.

Key:

O Potential over-specification from a corrosion point of view.

Y Probably the best choice for corrosion resistance and cost.

X Likely to suffer excessive corrosion without proper surface treatment. See Note [2]

(Y) Worth considering provided that suitable precautions are taken [i.e. specify a relatively smooth surface and then carry out regular washing].

Note:

[1] Distance from concrete surface to edge of anchor must be taken for consideration (for example 50 mm for 50 years life time of structure)

[2] By proper surface treatment and maintenance products may also be used in more demanding category. See Atmospheric-corrosivity categories EN ISO 12944-2, Table 1

[3] Plate and anchor types: see ETA-16/0430, Table 1

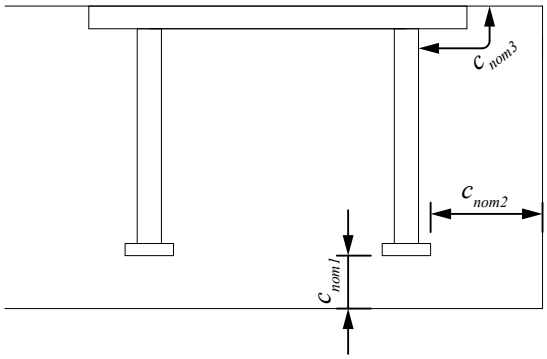

Figure 22. Distance from concrete surface to edge of anchor.

Installation of WELDA® Anchor Plate

Installation of WELDA® Anchor Plates at the precast factory or on the construction site

WELDA® Anchor Plates are installed to the planned positions before or during casting of concrete.

The precise position of the anchor plate is indicated on the design drawings. Anchor plates can be fixed on the formwork or on the reinforcement by nails, glue, double-sided tape, or clamps. If steel mould is used fixing using magnets is possible. Upon request, WELDA® Anchor Plates can also be supplied with nail holes for easier fixing. If the anchor plates are fixed to formwork special attention should be paid to achieve the required post-concreting tolerances.

It is not allowed to bend or cut the headed studs or anchors to make the plate fit the reinforcement. The anchoring of WELDA® Anchor Plates is based on the concrete cone, which is due to the headed studs. Bending or cutting the anchors reduces the resistance of the anchor plates because it downsizes the concrete cone.

Before concreting it is good to check the position of the anchor plate. Keeping tight planar tolerances reduces risk of concrete flush to cover the surface of the anchor plate during concreting.

In casting, the dropping height of the concrete should be kept as small as possible. This ensures that the mass stays even and the anchor plate is not exposed to great impelling forces. Close attention should be paid during casting and compacting to ensure that the position of anchor plates stays unchanged.

The concrete under the heads of headed studs or anchors, as well as under the base plate, should be properly compacted. If a vibrator is used for compacting, contact between the anchor plate and the vibrator is to be avoided. Especially bigger horizontal anchor plates are to be provided with air holes to enable adequate compacting under the plate area.

Only when the concrete has been hardened and reached the design strength can the anchor plate be loaded.

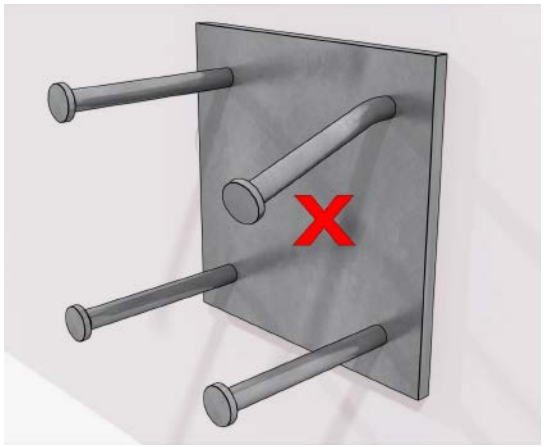

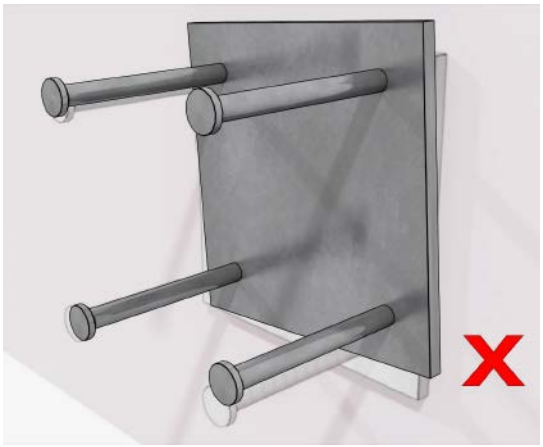

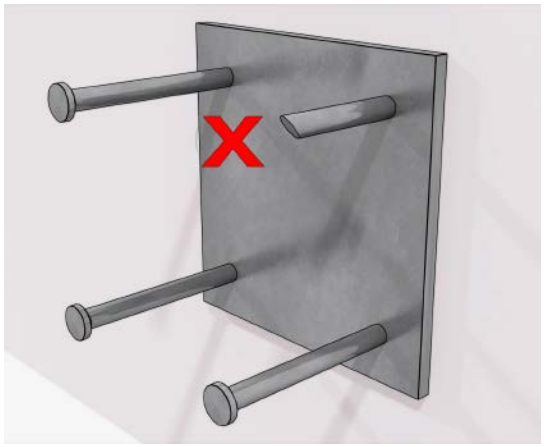

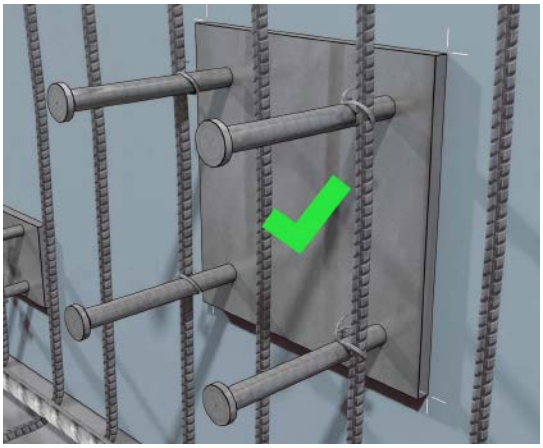

Welding to anchor plates on site

Normally, the steel component is welded to the WELDA® Anchor Plate after casting when the concrete has hardened. Fastcon can carry out welding of additional steel components to the anchor plate at factory by request, if the formwork preparation permits this before casting.

Welding to the anchor plates on site is carried out in accordance with the designer's drawings, the execution specification, and any additional instructions applying to matters such as inspections. The designs must include information on the qualification and quality level requirements, the execution classification and surface treatments, the materials used, and the extent of testing for welds.

For execution classifications of EXC2 and above, the company must have a welding coordinator with sufficient technical knowledge on the construction site. The welding coordinator is responsible for guiding and supervising welding and for welding-related documentation, such as qualifications and welding procedure specifications. Worksite welding must comply with the EN 1090-2 standard and the accompanying national annexes and reference standards, as well as other standards that may be associated with welding work (such as the EN ISO 17660-1 standard when welding reinforcing steel).

Welding must follow welding procedures and working methods that result in an adequate quality level as required by the welding class. The following must be taken into consideration when welding load-bearing joints and fastening joints:

- The steel is cleaned of ice, snow, moisture, rust, paint, grease, or other dirt and possible galvanization.
- Moisture must be removed from the area that is being welded. This can be achieved by heating e.g. using a gas flame just before.
- For MAG welding, care must be taken to protect the welding site from wind, as the shielding gas is vulnerable to the effect of wind.
- The welding electrodes and other welding additives must be dry and stored in accordance with the manufacturer's instructions.
- Welding should begin in the center of the structure and proceed toward the edges unless a different order is specified in the welding plan.
- The free movement of other structural components should be enabled during welding insofar as is possible.
- If structural components have preheat heat requirement, the components shall be heated according to the welding procedure specification (WPS.
- If the temperature is below +5°C, it is advisable to use preheating to all items being welded.
- At low working temperatures (below 0°C) or in humid conditions, the steel that is being welded must be preheated to a temperature of +50°C.
- Due to the risk of brittle fractures, preheating is more important when sturdier components are being welded.
- Preheating must also be carried out during tack welding in accordance with WPS.
- Sufficient welding power should be used and, for manual metal arc welding with covered electrodes, the electrodes must have the correct diameter in relation to the size of the weld bead.
- Excessive heat input should be avoided to prevent damage to the concrete structure beneath and to avoid excessive deformation of the plate and formation of tension.
- The welder must hold valid welder certification applying to the welding work in question and corresponding to the EN ISO 9606-1 standard, as well as the EN ISO 17660-1 standard for applications such as welding concrete reinforcements. The certification must be inspected and approved by the welding coordinator.

Table 19. Recommendations for welding consumables with common steel grades.

Material of the steel part	Material welded on the steel part		
	S235, S355	**1.4301**	**1.4401**
S235, S355	GMAW: G3Si1 FCAW: T 42 4 M M 1 H10 SMAW: E 42 4 B 42 H5	GMAW: G 23 12 LSi SMAW: E 23 12 L R 3 2	GMAW: G 23 12 2 L SMAW: E 23 12 2 L R 3 2
1.4301	GMAW: G 23 12 LSi SMAW: E 23 12 L R 3 2	GMAW: G 19 9 L Si SMAW: E 19 9 L R 1 2	GMAW: G 19 12 3 L Si SMAW: E 19 12 3 L R 1 1
1.4401	GMAW: G 23 12 2 L SMAW: E 23 12 2 L R 3 2	GMAW: G 19 12 3 L Si SMAW: E 19 12 3 L R 1 1	GMAW: G 19 12 3 L Si SMAW: E 19 12 3 L R 1 1

GMAW = Gas Metal Arc Welding (MAG Welding)
SMAW = Shielded Metal Arc Welding (Welding with stick electrode)
FCAW = Flux Core Arc Welding

Fastcon

СРЕДСТВА ПРОЕКТИРОВАНИЯ

Пользуйтесь нашим профессиональным программным обеспечением, чтобы ускорить свою работу, а процесс расчета сделать простым и надежным. Средства проектирования Фасткон включают в себя программное обеспечение для проектирования, 3D компоненты для моделирования, инструкции по установке, технические руководства и сертификаты соответствия продукции Фасткон.

ТЕХНИЧЕСКАЯ ПОДДЕРЖКА

Команда нашей технической состоит из квалифицированных инженеров и доступна для помощи в составлении расчётов и ответов на ваши технические вопросы по проектированию, установке и применению продукции Фасткон

СЕРТИФИКАТЫ СООТВЕТСТВИЯ

Сертификаты соответствия, Технические руководства и другие нормативные документы размещены на официальных страницах продуктов на веб-сайте нашей компании.

ЭКОЛОГИЧЕСКИЕ ДЕКЛАРАЦИИ И СЕРТИФИКАТЫ СИСТЕМЫ МЕНЕДЖМЕНТА

Экологические декларации и сертификаты системы менеджмента размещены в разделе “Качество, окружающая среда и безопасность” на официальном веб-сайте нашей компании.

ООО «Фасткон»
194292, Россия, Санкт-Петербург
ул. Домостроительная, д. 16
Телефон: +7 (812) 329 07 04
www.fastcon.ru